Treadwall FT® Series Owner's Manual

Max and S Frames

87 York Ave. Randolph MA 02368 USA | 781-961-5200 | www.brewerfitness.com

 Rev August 2019

TREADWALL^{FT}® Series

Complete Owners Manual

Table of Contents	

INTRODUCTION

Vertical movement is a new category of training that works the whole body and mind together.

The Treadwall^{FT} series delivers a full range of workout opportunities - from a remarkable aerobic burn to an upper-body core and grip-strength workout that challenges the fittest athletes.

When introducing a Treadwall it is important that the staff understands how to unlock the potential benefits of this powerful fitness tool.

The owner's manual is designed to help managers, staff and trainers take full advantage of this equipment. This reference tool emphasizes the benefits of vertical movement with links and resources to help integrate the wall into fitness routines. In addition, there are incentive programs to help ramp up popularity and much more.

PRODUCT REGISTRATION

Record your serial number here:_____

Please register your Treadwall with us by emailing us at sales@brewerfitness.com with your contact information and serial number to complete your product registration.

You must make sure to register your new Treadwall to receive service updates.

Safety Tips

WARNING - Read all instructions before assembling and using the Treadwall.

In General - Handling and Assembly:

Be careful when moving and installing larger Treadwall components as they require effort to lift and attach. Some steps require two individuals. Have a second person assist you during assembly and make sure to have two ladders on hand.

Carefully read and understand the Treadwall Owner's Manual. Provide a general overview of the basic operations and usage to new Treadwall users. Do not place other equipment or any items in the fall zone or onto the floor mat of the Treadwall.

FT Multipurpose Specifications

	Max Frames	S Frames	V Frames
Weight			
Width climbing surface	4 feet/6 feet	4 feet/6 feet	4 feet/6 feet
Length climbing surface	18-20-22 feet	18-20-22 feet	18-20 feet
# hold Placements	144...264	144...264	144...240
Angle Range	+10 to –35 deg	+10 to –15 deg	Vertical only
Electrical Requirement	9 V Plug-in Transformer	9 V Plug-in Transformer	9 V Plug-in Transformer
Maximum Hold Size	2.5" high x 6" wide	2.5" high x 6" wide	2.5" high x 6" wide
Included Holds (Pro)	36/45 custom holds	36/45 custom holds	36/45 custom holds
Electronic Display (Pro)	Distance, time, calories	Distance, time, calories	Distance, time, calories
Floor Mat (Pro)	1.25" dual foam , black vinyl	1.25" dual foam , black vinyl	1.25" dual foam , black vinyl
Warranty	6 years parts, one year electronics and labor	6 years parts, one year electronics and labor	6 years parts, one year electronics and labor

Operating Instructions

INTRODUCTION

There are 2 or 3 primary controls to know about on the TreadwallFT units.

You can adjust the **speed** of the climb with the lever located on the right side of the machine, you can adjust the **angle** of the wall with the lever placed on the left side of the machine (Max and S only) and you can view and track the stats on your exercise with the **digital counter** on the right side of the machine.

HOW THE TREADWALL® WORKS

It's very simple, you can just hop on and climb! The weight of your body will move the wall downwards. With our auto-stop technology, if you stop climbing, the Treadwall will stop and wait for you when your feet reach the bottom. The Treadwall will not move unless you are on the wall and climbing upwards.

You can adjust the angle of the wall as well, which makes it easily adaptable to a large variety of abilities and fitness goals. Easier angles are great for aerobic workouts and focus on the lower body. Overhanging angles target upper body strength and really engage the core.

Use the digital counter to set goals, manage your progress, and track your exercises. The counter will begin automatically counting upwards when you start climbing, or you can set time and distance goals on the setup screen.

Operating Instructions

Speed Control

To control the speed of your climb you simply move the lever up and down. At the "0" setting the Treadwall will be completely stopped for most people or it may just barely creep downwards for heavier individuals. At speed "10" the wall is at its fastest and only requires about 50 pounds of weight to move. The ideal setting will be different for people of different weights.

Accurate current and average speeds are displayed on the counter in feet/min. or meters/min as required.

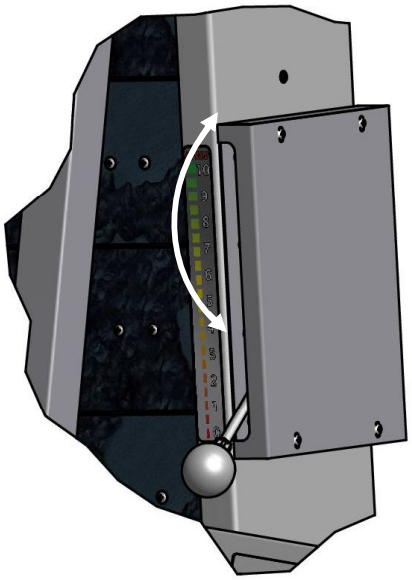

Changing the Angle

The angle of the wall makes a big difference! The Treadwall can be adjusted (Max and S Frames) over a range of angles from a relatively easy slab to a very challenging overhang.

Increasing (harder) angles:

Option 1: while standing in front of the climbing surface, pull down on angle lever and push the surface back to desired degree of difficulty.

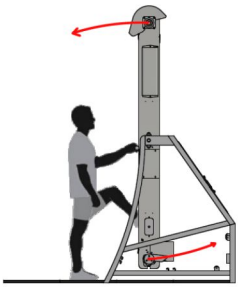

Option 1

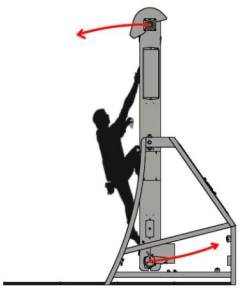

Option 2

Option 2: while climbing, **gently** push down the angle lever and the climbing angle will increase using your body weight.

Decreasing (easier) angles:

While standing in front of the machine, pull down on the angle lever and the wall will swing back to an easier angle on its own. You may have to assist by pulling the wall forward.

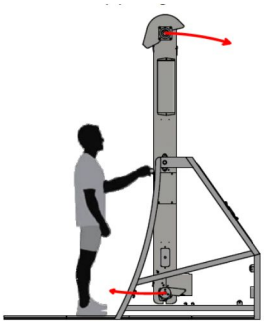

Operating Instructions

Digital Counter

The counter will start as soon as you begin climbing. It will pause if you rest for 5 seconds, and it will power down after 5 minutes of non-use. To turn the counter back on just start climbing, or tap the screen.

You can adjust the view angle by adjusting the small arm at the rear of the counter.

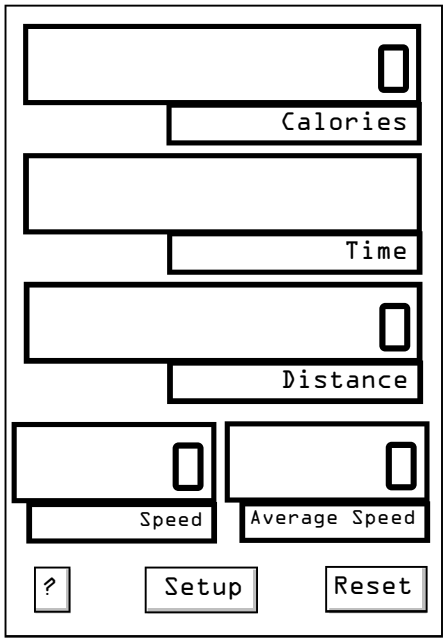

Home Screen

The home screen shows real-time data for a single climb. When you pause for 5 seconds the counter will hold your data on the screen until you begin climbing again and then it will start from where you left off. To reset the counter for a new climber hit "Reset."

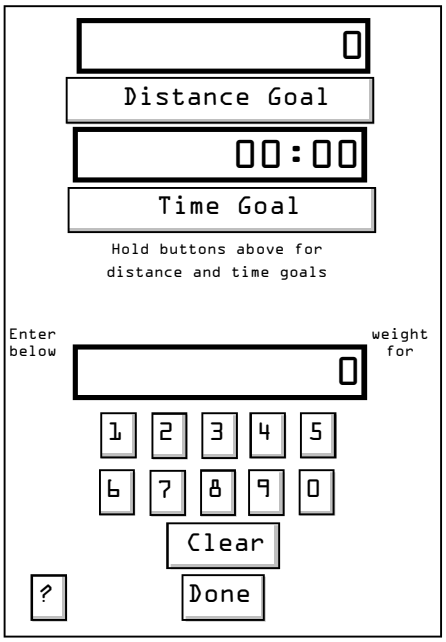

Setup Screen

To set a distance or time goal tap or hold the buttons labeled "Distance Goal" or "Time Goal". The values will increase more rapidly as you hold the buttons down longer.

The number pad allows you to enter your weight for a more accurate calorie count. The default weight is 150 pounds. When you are satisfied with your goal, hit done and the value you selected will appear on the home screen.

You can only select a distance or a time goal, not both at once.

Making Your Treadwall a Success

Groundwork:
Staff should understand that vertical movement is a basic human activity and part of everyday life. It should be presented as a positive and accessible addition to the facility.

Climbing will often be perceived as challenging and intimidating. A staff locked into the value of vertical movement as a fitness tool is the key for changing this perception. Members should be actively encouraged to try the Treadwall and consider it for part of their workout routine. We have found that people who are initially hesitant often end up being the biggest Treadwall fans.

Choosing an Advocate/Integration

When the Treadwall is first installed, it will be an unfamiliar item. Climbing will be a relatively new training activity for most. We recommend that a staff person be chosen as the main advocate for the product's introduction period. This person might take on the following responsibilities:

1. Read through the manual thoroughly to become familiarized with the Treadwall operation procedures, use and set-up.
2. Formulate a plan to integrate this equipment into their classes, personal training or general usage.
3. Create fun ways to get you members hooked on Vertical Movement - challenges, competitions and incentives (such as our popular Everest Club program).

Set up a meeting with trainers to Establish Goals and Discuss Ideas:

1. Cross-training for sports that emphasize forearm strength such as martial arts, baseball, swimming and tennis.
2. Weight-loss programs. Focus on manageable goals, using easier positive angles. Emphasize smoothness over speed.
3. For Cardiovascular try 15 minutes once a week or every two weeks in place of a treadmill.
4. As a warm-up, especially for lifting. Suggest using ground-based training (hands only) for larger lifters.

Information for Your Staff

The Benefits of Vertical Movement: *Valuable Information*

Most fitness activities target isolated muscle groups, but vertical movement is different. Using a Treadwall provides a full-body, non-repetitive exercise that can be adapted by the user for different goals. You can customize the experience by adjusting the exercise patterns, angle of the wall and climbing speed.

In terms of focus and mental involvement, climbing has no peer. The activity requires constant decision-making and concentration. This promotes a quick motor response and muscle recruitment. Technique, balance and core strength interplay and climbers often develop a heightened sense of body awareness and confidence in their daily lives.

The Treadwall is very versatile. It can stand alone as a high- energy interval trainer, with longer workouts to develop endurance, or as part of a circuit routine with other equipment.

Customize it to suit YOUR needs and GOALS:

1) You should use the equipment yourself. Get a first-hand look at how the workout makes you feel, learning to access angle and speed to accommodate a range of abilities. Experience the benefits of vertical movement personally.
2) At first, clients might consider this equipment to be intimidating, but knowledge you can pass on to your members about training and benefits will help bridge the gap.
3) Check out all the different ways it can be used, experimenting with different hand grips, angles, speeds and body movement. Your personal experience and enthusiasm will engage the user. Be creative.

Encourage members and clients to try it out:

Introduce it at the easier positive angle first so that members can get familiar with the balance and motions involved. The workout on the Quick Start guide at *www.brewersledge.com/ownersmanual* is a good place to begin.

Emphasize controlled, smooth climbing and attention to balance and footwork.

Suggest short workouts to start, which will complement their current workout routine.

Training Tips/Guidelines

Below you will find different training tips we have learned over the years that can ease your clients into Vertical Movement.

Initial Exposure When your clients and members are trying out the Treadwall for the first time:

1. Ensure speed is on zero before having them climb.
2. Ask if they would like you to control speed at first.
3. Encourage them to try adjusting the speed themselves: Set the speed to 0 and tell them to climb about half way up. Let them know that at settings 7 to 10 the speed is quite fast, so move the speed lever slowly. All they have to do is hang on, reach for the speed lever, and pull it up a small amount.
4. Have them take it slow at first and focus on smooth movement.
5. Emphasize the need to move your feet above a certain panel to keep the wall moving. Auto-stop will automatically stop the rotation as they approach the bottom.
6. Tell them they can keep going even after the auto-stop has engaged, just continue climbing and the wall will resume rotation.

Initial Workout:

Most people are unfamiliar with climbing holds, but the Treadwall Base set is very user-friendly. If ordered, the Ladder Line is an excellent way to introduce them to the basic balance and movements. Try having them start on the Ladder Line first for a couple of minutes to get a feeling for it.

As they continue to climb, then suggest using a few of the climbing holds as well as the Ladder rungs.

If the client is looking for a more complete challenging program, or you need ideas, refer to our website where you will find complete training programs and sample workouts.

Training Tips/Guidelines

Climbing is a progressive activity—there is a great deal to learn about balance and technique. The initial workouts should emphasize the fun and excitement of re-learning an activity that has roots in the earliest childhood years. As climbers progress and become more comfortable, they naturally and inevitably gravitate to the more challenging aspects of the sport.

Climbers love "problems" - climbing problems that is. They seek them out. They talk about them. They work on them—sometimes for months or even years. Few things in life are more satisfying than solving a tricky, elusive "problem" that initially seemed completely improbable if not downright impossible.

QUICK HINTS:

1. Start them **slow**. Remind about auto-stop sensor panel.
2. Focus on **Safety.** Don't jump off—ride it down. It will stop at the right height to step off .
3. Tell them they are **not very high** off the ground if they seem reluctant (focus on the padding below).
4. Mention the **benefits** of **Vertical Movement** so they are aware of **WHY** they should use the equipment.

Full-Body/Burn Calories/Lean Muscle/Core Strength/Balance

1. Refer www.brewerfitness.com/ for downloadable versions of the **Quick Start** guide, printable Training Logs, resources for articles on the benefits of climbing etc.
2. Refer to our website for **full training program** ideas and short workouts.

Activities & Promotional Ideas

Setup a Mt. Everest club challenge for staff and members:

Perhaps use teams. (Brewer Fitness provides free Everest Club membership to the first three staff members to complete the challenge.

Recognize the first members to start on Mt. Everest Club challenge:

Use the bulletin board to put up names and perhaps pictures.

The Everest Club:
Climb 29,028 feet on the Treadwall and you are eligible to join. You can find the Everest application and a training log at
www.brewerfitness.com/OwnersManual
Special incentive:
Brewer Fitness provides free Everest Club Membership to the first three staff members to complete the Everest Challenge

Completing the Everest Challenge is a major accomplishment. Climbing 1000 feet a day, seven days a week, it will take a full month. For most people it will take the better part of a year. Anybody who completes this challenge will come out a different person—fitter, stronger, healthier, and most likely more confident. An important advantage to having a Treadwall is being able to offer this unique program.

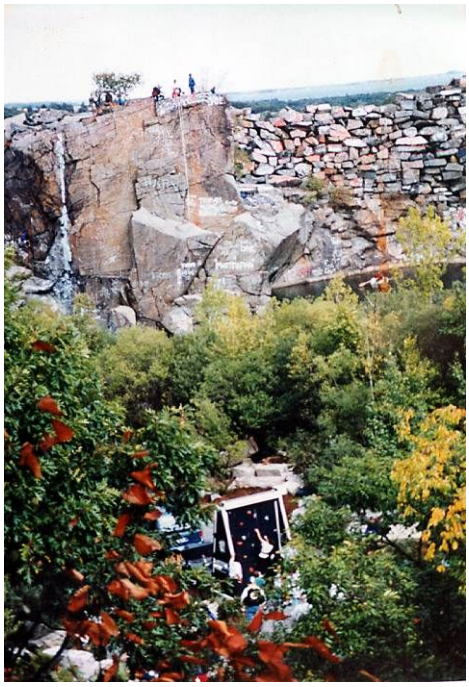

Activities & Promotional Ideas

Elevation/Location

30' Typical street lamp
40' Height of the Parthenon
190' Niagara Falls (American Side)
302' Statue of Liberty
555' Washington Monument
607' Space Needle, Seattle
642' Top Span, Astrodome roof.
984' Eiffel Tower, Paris
1250' Empire State Building, New York
1454' Sears Tower, Chicago
2,717' Burj Khalifa (tower in Dubai)
3200' Angel Falls, Venezuela
4610' Mt. Vesuvius, Italy
5117' Devil's Tower, Wyoming
5267' Mt. Katahdin, Maine
6288' Mt. Washington, New Hampshire
7310' Mt. Koscivsko. high point in Australia
7569' El Capitan, Yosemite National Park
8842' Half Dome, Yosemite National Park
9570' Mt. Olympus, Greece
11245' Mt. Hood, Oregon
13766' Grand Teton, Wyoming
14161' Mt. Shasta, California
14495' Mt. Whitney, high point continental US
14692' The Matterhorn, Germany

Other Ideas:

1. Other distances : trail length (Appalachian), Body of Water Length (English Channel)
2. Weekly "Tread crew," meet up group
3. Bi-monthly Competitions using wall (Triathlon: Rower, Pool, Tread-wall) or other cardio pieces

Frequently Asked Questions

Q&A

How hard is climbing on the Treadwall?

Climbing on the Treadwall is as hard or as easy as you choose. The wall is customizable in difficulty by altering the speed, angle and route you follow.

How fast can I climb on the Treadwall?

The Treadwall is easily adjusted via the speed lever. In addition, the auto-stop system will keep pace with your stops and starts. We recommend starting off climbing at a slower controlled pace, focusing on smooth movement.

How does the Treadwall work?

The Treadwall operates by the weight of the climber. There are no electric motors. A hydraulic brake controls the speed of descent. The Treadwall cannot move after the climber steps off.

How long should I climb for?

This depends on your objectives. Test out various methods and take a look at our training section at www.brewerfitness.com

Will the hold pattern get repetitious?

Eventually, but it takes much longer that you might expect. The Treadwall has no beginning or end, and it continually presents you with new challenges and possibilities. It is simple to set holds in other places and change the climb completely.

Do I need special shoes to climb the Treadwall?

No. Any well fitted athletic shoe will do quite well. However, special climbing shoes are more enjoyable to climb in. Climbing shoes are very close fitting with a special flat sole of special 'sticky' rubber. They are quite expensive. Karate shoes are a good inexpensive alternative.

Can anybody use the Treadwall?

Almost anyone can perform vertical movement. Anyone with a serious physical problem should consult with their doctor, and people with very long fingernails should think twice. We also suggest taking off your rings before climbing.

Can you be too old to climb?

Maybe, but we have reports of people well into their 70s who enjoy climbing on the Treadwall. One climber 72 years old recently completed the Everest challenge (29,028 ft.) - for the 10th time!

Frequently Asked Questions

Does everyone like it?

Most people who try the Treadwall love it. Some of the biggest fans are people who start off saying "I don't think I'd like that." Everyone should be encouraged to give it a try.

I have never done that. Will it take me long to learn?

Never climbed? - not likely. Most children spend many happy hours climbing play equipment and trees. For adults, climbing on the Treadwall recaptures much of that simple joy and natural vertical movement.

What kind of bodies does Vertical Movement build?

Climbing and gymnastics are similar, promoting muscle tone, flexibility and endurance with increased agility and body awareness. Your body will respond by burning fat, creating a lean muscle structure and increasing bone density

Do serious climbers like the Treadwall? Yes, it is a perfect endurance training tool, all the way from elite climbers to a novice.

General Maintenance

INTRODUCTION

Treadwall® maintenance is easy and requires only lubrication and cleaning. The most important maintenance of the Treadwall occurs during the first month of operation when the chain and cables are stretching to their final length. It is very important to keep the angle-adjuster cables tight during this break-in period so that the coils remain even and do not overlap. Also the drive chain must be tightened after 2-3 weeks of use. Instructions for these adjustments are included here.

THEORY OF OPERATION

Treadwall[FT] series is completely powered by the climber. The wall does not rotate by itself, but only when a person begins to climb on the machine. You can vary the speed of climbing with the lever located on the right side of the machine. This lever controls a hydraulic resistance unit located at the top of the right channel. The hydraulic resistance mechanism is connected to the main shaft with a short chain.

Our auto-stop system is triggered when the weight of the climber's foot reaches the bottom panel. The Treadwall will not move when someone is standing and not climbing upwards. The internal sensor for this system is located at the bottom right side of the machine.

The panels slide through the side channels on small plastic buttons which help reduce friction in the system.. These buttons are located on the top front face and the bottom rear corner of each panel. The panels also contain welded fasteners which allow the climbing holds and various attachments to be added in any configuration the user wishes.

The entire center section of the wall pivots to allow for the angle of the wall to change. This is controlled by a patented system of synchronized cables. A lever on the left side of the unit (Max and S frames only) releases the brake that hold the angle—this can be changed either before using or while climbing.

There is an electronic counter on the right side of the machine (Pro models) that allows users to track distance, time, and calories. The sensor for this system is located on the inside the right channel. The sensor detects a series of magnets placed on the main shaft.

General Maintenance

Maintenance Schedule

After The First Month:

- Check the drive chain to make sure that it is not loose. Tighten if necessary.
- Check the alignment on the angle adjuster cables and adjuster cassette. Gently tighten any slack that develops. Realign frame if needed.

Every 6 Months:

- Lubricate the side channels —*This can be done more or less frequently depending on usage.*
- Clean the Climbing holds and set new routes.
- Wipe down and clean machine.

How to access the inside of your Treadwall

The Treadwall wall panels are bolted to a set of chains. These two chains form a continuous loop around the top and bottom axles. Each panel is attached to flanges mounted on the chains with 4 Philips head bolts and 3/8" lock nuts.

Rotate the wall so that the desired panel is lined up with the access hole. Remove the cover, then remove panel bolts and nuts. Rotate the wall downward and allow the panel to drop out at bottom. Multiple panels can be removed in a similar manner if necessary. Rotate the wall until the opening is at the height where service is required. Reverse this process to reattach the panel and cover up the access hole.

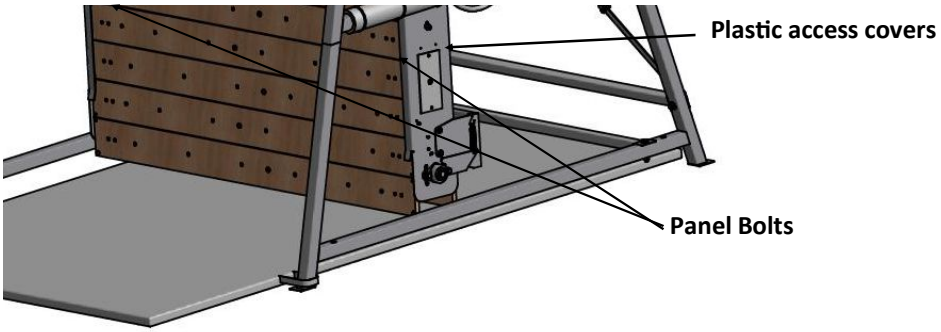

Troubleshooting

Problem	Cause	Solution
Entire Treadwall wobbles or moves	Exterior X-bracing too loose	Tighten the exterior X-bracing making sure that the entire frame is square and level
Main channel section sways side-to-side	Internal x-bracing too loose.	Tighten Internal x-bracing. Do not over-tighten. Tighten until just firm. When you have completed this adjustment, make sure locknuts on the turnbuckles are very tight
Chain makes slapping noise	Drive chain too loose	Tighten drive chain and make sure that lock nut is tightened firmly
Speed control lever does not work	control cables may need adjusting	Remove hydraulic cover and inspect the path and tightness of the control cable.
Auto stop doesn't work or works erratically	Microswitch needs adjustment	Check and adjust the small switch at the bottom of the right channel. Also, make sure that unit is plugged in and receiving adequate power .
Wall is sluggish: lighter weights will not pull wall down	Either the drive chain too tight, the channels need lubrication, or the ends of the panels are rubbing the channels	Loosen the drive chain, lubricate the Treadwall, and check the internal x-bracing
Hold rotates	Hold bolts not sufficiently tightened	Re-check hold bolts; re-tighten with a 5/16" Allen Wrench
Display does not power on	The Treadwall is not plugged in, not receiving adequate power, there is a loose connector, or a wire is cut	Check that the Treadwall is plugged in and the power outlet is working. Check all connectors and cables for good fit and good condition
Display is powered up but will not start counting	Sensor and magnets not adjusted properly, broken, or missing	Check the sensor located on the inside top of the right channel. The gap should be no more than 1/8"

Troubleshooting

FIXING JAMMED OR SLUGGISH TREADWALL

Parts and Tools Needed:
Wrenches, Allen wrenches, hammer or mallet,
2x4 block – depending on correction.

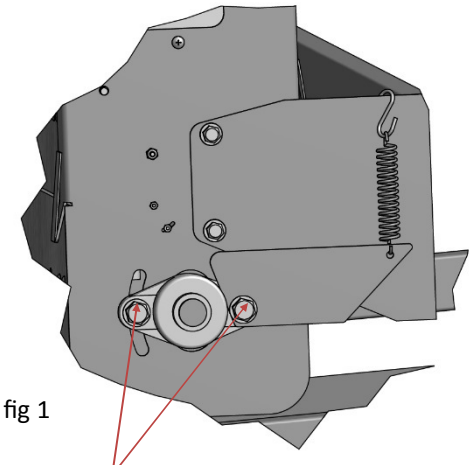

fig 1

These bolts must be slightly loose

Procedure:
Occasionally we encounter a Treadwall which is jammed so that it will not rotate or which operates very sluggishly. There are several reasons that his can happen:

Holds too big: If a hold projects out more than 2 ½" it will get jammed and prevent rotation. Remove any holds like this.

Holds overlapping panels: Each hold must be completely on its own panel. If it overlaps onto an adjacent panel it will prevent rotation and could damage a panel. Orient all holds to prevent this.

Lower bearings (fig 1): The tension of the lower shaft and bearings is important. If there is not enough tension, the panels can jam at the back of the wall near the bottom where the panels must re-enter the channel. This tension is regulated by a spring. In order for this to work, the bearing bolts must be slightly loose. If these bolts have been tightened for any reason, loosen them slightly to allow the bearings to swivel.

Channel-panel misalignment (fig 2): the panels should be centered between the two side channels with a gap of about 3/8" at each end. This can be easily seen from the back of the wall at the top. If the ends of the panels are rubbing on one side it will create a lot of friction. The solution is to reset the channels on the shaft. Loosen the setscrews on the large square bearings, realign the channels with a mallet and 2x4 block, and retighten the setscrews firmly.

Drive chain too tight (fig 3): The tension of the drive chain is set by an adjuster at the top of the hydraulic pump. All slack should be adjusted out, but if it is too tight the Treadwall will be very sluggish. Loosen locknut, slack off, make it finger tight and retighten locknut.

Lubrication: The Treadwall channels should be lubricated annually. See separate sheet.

Square

fig 2

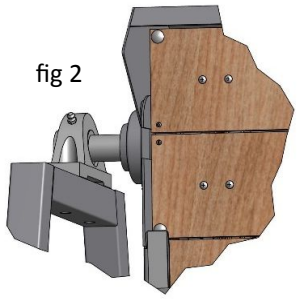

This gap the same at both ends of

fig 3

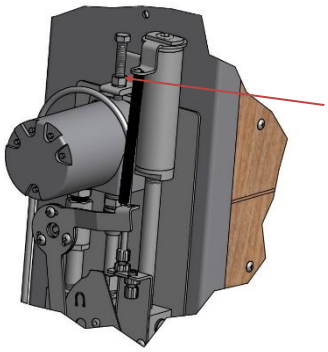

Drive chain tension adjuster

Service Instructions

Drive Chain Adjustment

1. The drive chain can be adjusted from the outside of your Treadwall, you only need to remove the hydraulic box cover on the top right of the machine.
2. Loosen the locknut on the adjustment screw, and tighten the screw down onto the pump. Only make it finger-tight. If the chain is too tight, the Treadwall will operate sluggishly.
3. Tighten the locknut and check the chain – feel it with your finger at the inspection hole. There should be no slack, but not too tight.

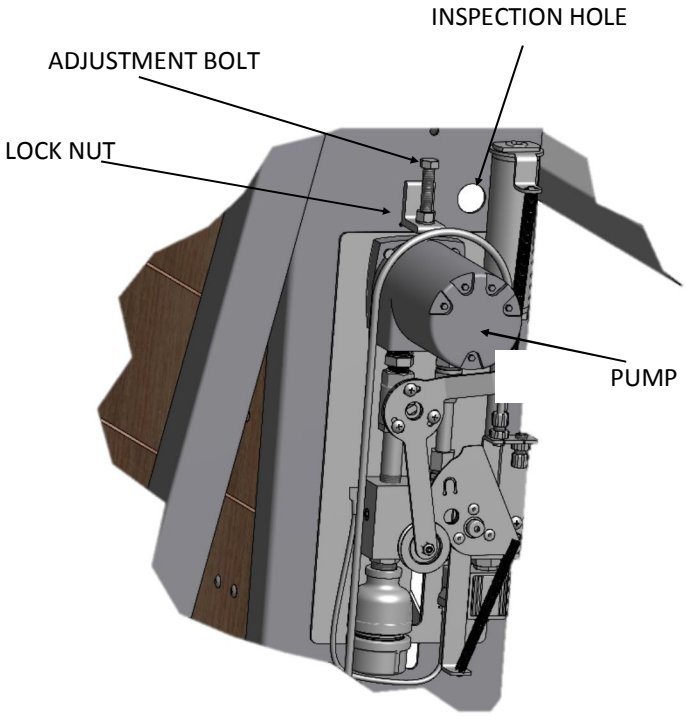

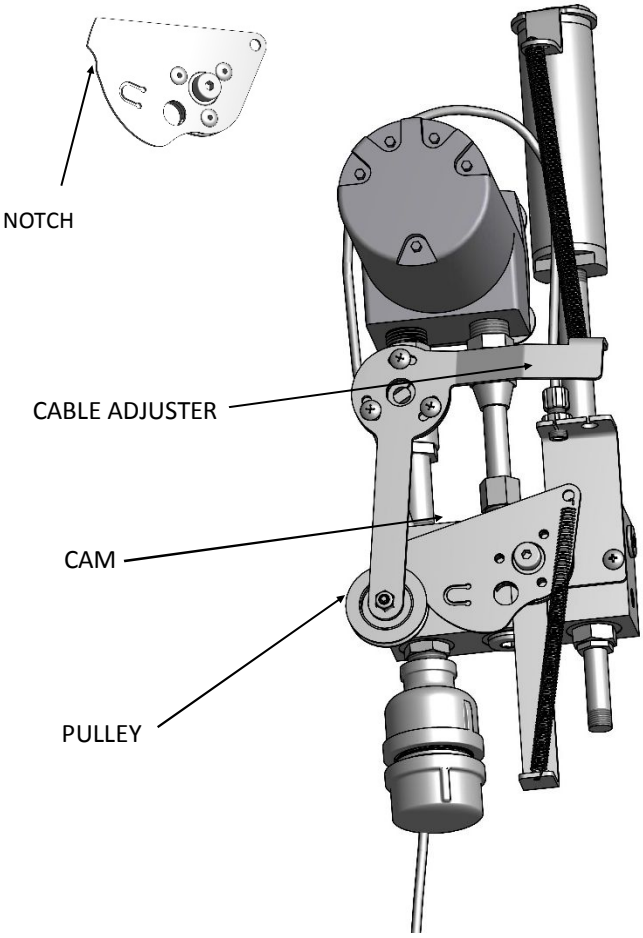

Speed Lever Adjustment

1. Adjust the speed lever to the slowest position.
2. The hydraulic unit is at the top of the right channel. Remove the cover (two screws).
3. Note the cam and pulley that together control the valve. With the lever at slowest position, the pulley should be at the highest point of the cam. There is a notch at the highest point that the pulley fits into.
4. If the pulley is not at the highest position, tighten the cable with the adjuster.
5. Operate the lever a few times to check the adjustment. If the wall still creeps excessively, see the instructions for adjusting the cam follower.

Service Instructions

Auto-Stop Adjustment

1. Loosen the two small nuts on the outside of the channel that hold the microswitch in place.
2. Adjust the microswitch by pivoting it around its upper mounting screw (see diagram).
3. Retighten the small nuts (not too much force – they are very small!)
4. Test the wall and re-adjust if necessary.

If the microswitch needs to be inspected further or replaced remove the plastic access hole cover and all nuts and washers from the microswitch. Reach inside of the access cover and unclip the electrical wire from inside the channel and pull the microswitch out.

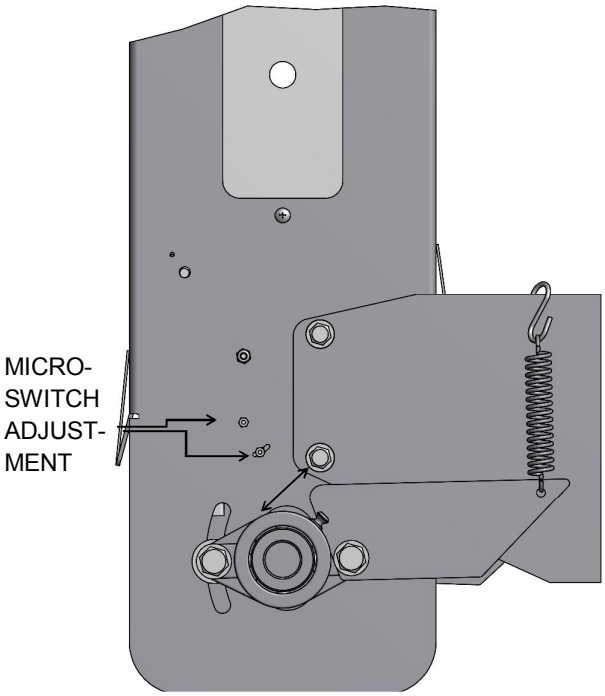

BOTTOM OF RIGHT CHANNEL

Counter Sensor Adjustment

1. Remove 1 or 2 panels
2. Rotate panel gap to reveal sprocket and sensor assembly on right side of machine.
3. Inspect sprocket and make sure that three magnets are present, they should be equally spaced around the shaft with the flat face of the magnet facing outwards.
4. Inspect reed switch position, the tip should be 1/8 to 1/4 inch from the magnets. Units before October 2019 have a fixed plastic clip: sensor is adjusted in the clip. Units after October 2019 have a plastic adjustment plate that is adjusted to move the sensor.

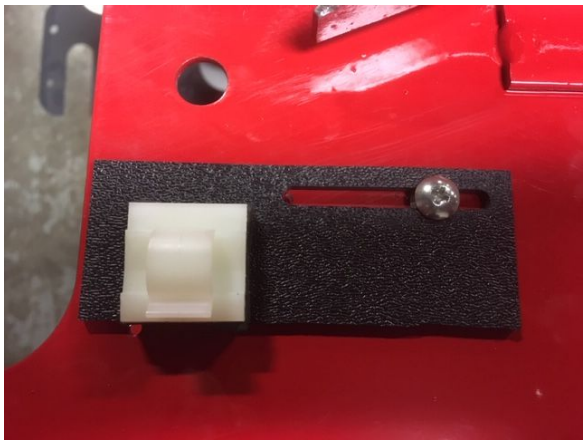

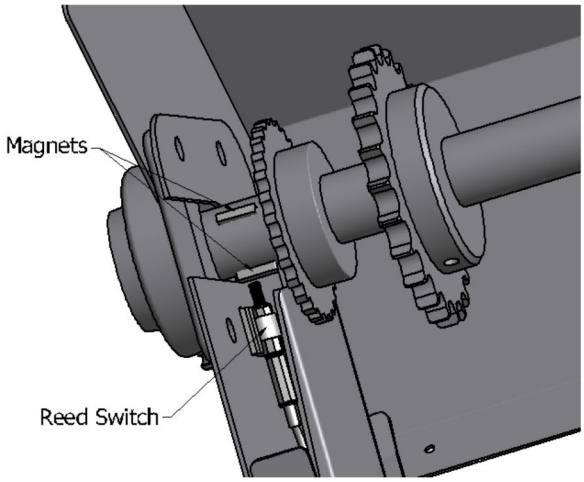

Service Instructions

TREADWALL AND LADDERMILL SPEED LEVER RESISTANCE

Parts and Tools Needed:

Phillips head screwdriver
9/16" wrench or small adjustable
(4) Belleville washers (not usually

Shown with top cover

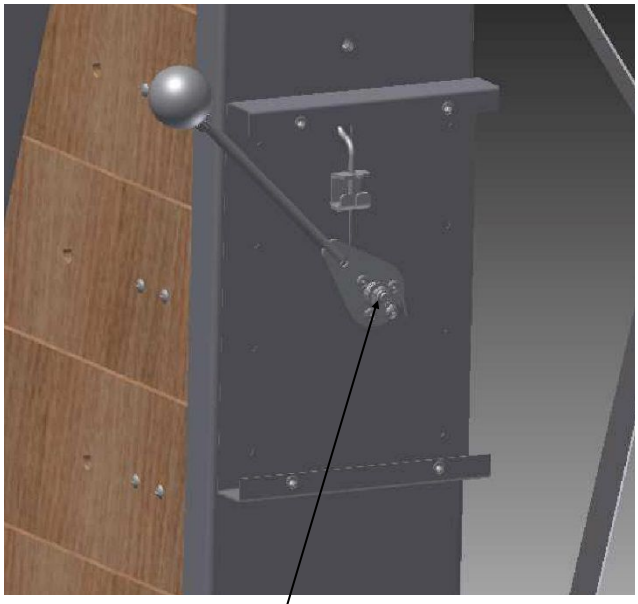

RESISTANCE ADJUSTMENT NUT

Procedure: (about 10 minutes)
The speed adjustment lever has spring washers that maintain resistance. Over the course of time it may need adjustment to restore the correct amount of friction.

Remove the cover from the speed control box (four screws).

Adjust the central mounting nut to achieve the desired resistance.

If tightening the central mounting nut does not create the required friction, you may replace the four friction (Belleville) washers by removing the nut and washer and replacing the Belleville washers with new ones. See diagram for replacement positions (cupped, facing each other).

Replace cover.

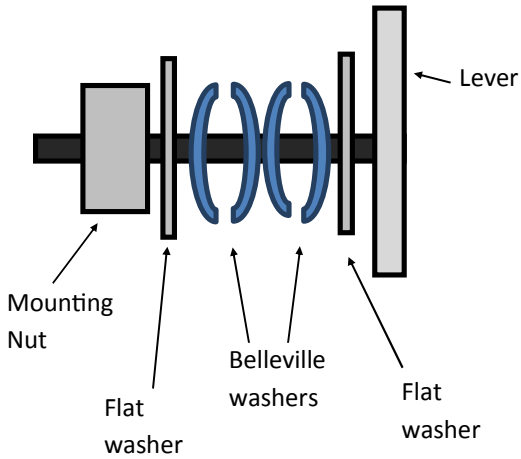

Service Instructions

Adjusting the Caliper Brake

Parts and Tools:
Phillips-head screwdriver
5 mm allen key with ball end

The channels are held at the desired angle with a caliper brake inside the bottom of the left channel. If the angle is not holding firmly enough, the caliper needs adjusting.

Procedure:

Set the wall to a vertical angle and remove the rectangular access-hole cover at the bottom of the left channel (black plastic cover – two phillips head screws).
The caliper is located just below the access hole and is easily reached through the access hole.
The caliper has a knurled knob, about 1 inch in diameter, that adjusts the brake pads. There is also an allen key slot that does the same function.
This knob is on the outside of the caliper, close to the large chain sprocket.

To adjust the caliper, it must be held open. Have an assistant hold the angle-control lever all the way down and at the same time hold the wall from swinging forward during the adjustment.

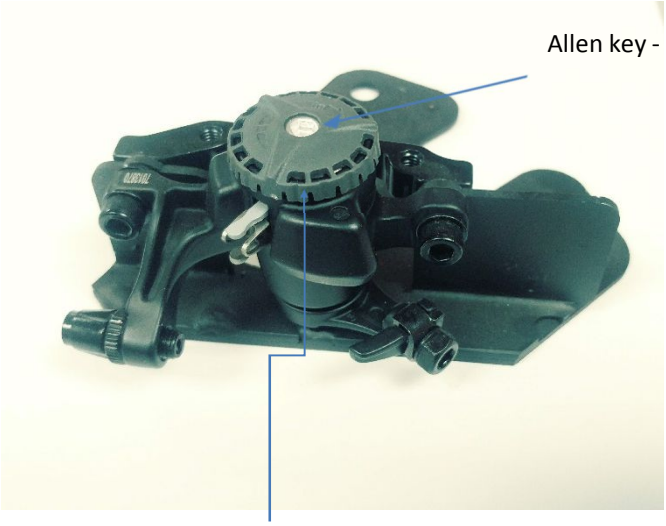

Service Instructions

Trouble shooting Electrical Issues

Fig. 1

Parts and Tools Needed:

Low voltage testing light (helpful)
Basic multi meter (better)

Procedure:

This sheet is designed to help you isolate an electrical issue. For specific processes and replacement procedures, consult the correct instructions. This sheet assumes your display and/or auto stop (Treadwall) are not working.

If the display is not lighting up, check the power source first. Make sure the outlet has power, then unplug the transformer from the unit (not outlet) and check that it has output voltage (9 or 12 volts). Earlier units have bullet connectors where the female connector is positive. Current models have a 2.1mm male plug where inside of the male plug is positive (fig 1). Polarity matters. If there is power, reconnect the transformer to the unit.

If the display does not light up but the transformer works, check the display 2.1mm power plug. You should have voltage. If not, check the power feed wire or it's connection inside the wall (Treadwall only, fig 2). If there is voltage but the display does not work, please call us to arrange a return of the display and repair.

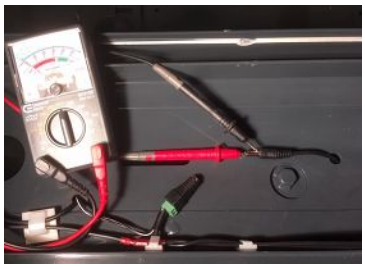

Fig. 2

Treadwall only the following steps.

If the display lights up but the auto stop is not working, you can remove the spade connectors from the microswitch (MS) at the bottom (fig 3) and check for voltage between them. This will involve opening the side panel and reaching in to remove the spade connectors (harder) or removing a panel (more time but easier).

If there is voltage at the MS, but the auto stop still does not work when the MS is activated ("Clicks" closed), check the solenoid. Remove the hydraulic box cover, replace the spade connectors, and have someone depress the micro switch manually. If the solenoid is working, you should hear a "click" when activated, or alternatively remove the nut and solenoid coil from the valve stem and see if a paperclip with become magnetized inside the coil power is applied (fig 4).

Fig. 4

If the solenoid is working and activating with power, but the auto stop is still not functioning, check non-electrical issues such as low oil and the drive chain.

TREADWALL WIRING

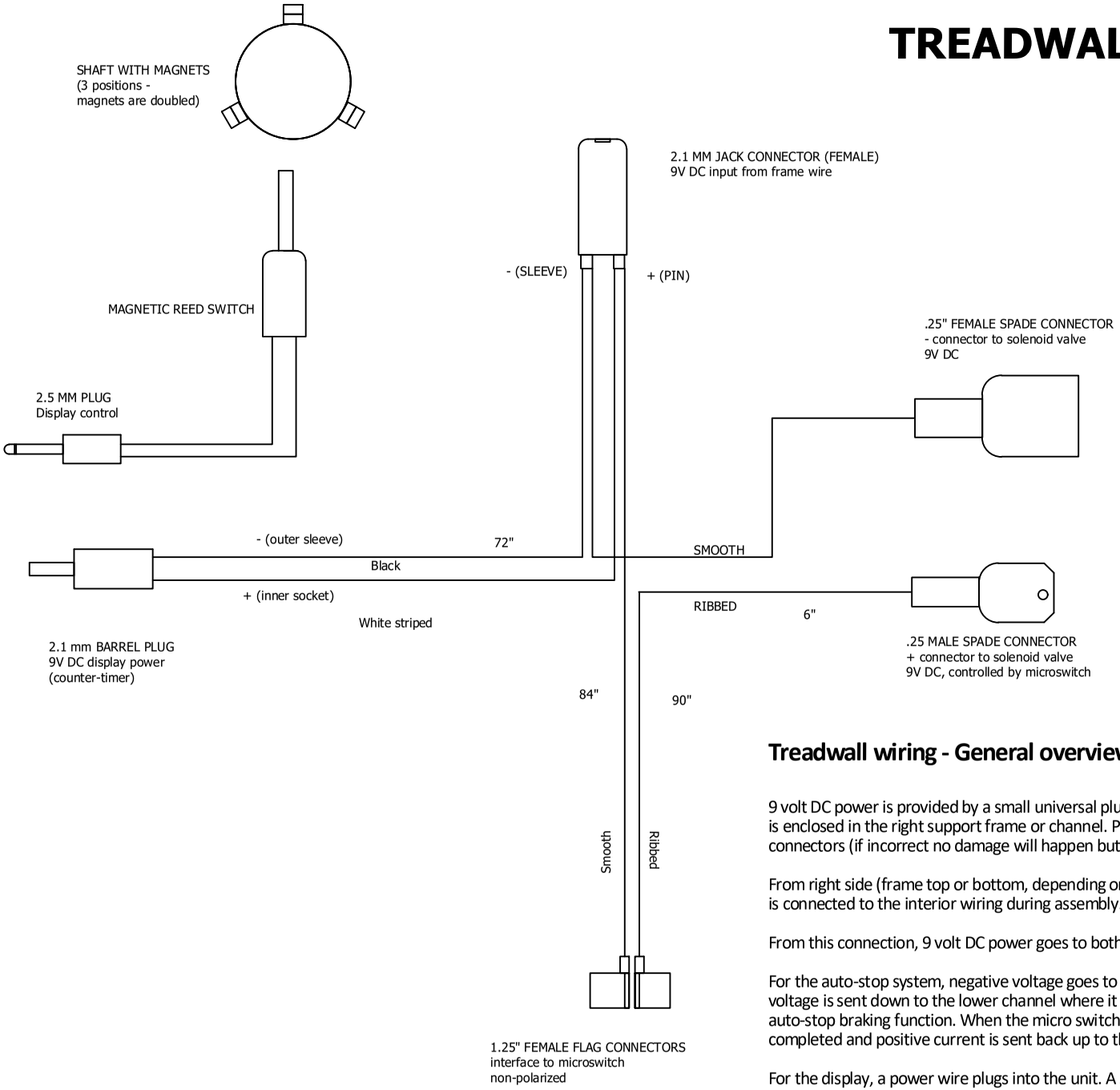

Treadwall wiring - General overview

9 volt DC power is provided by a small universal plug-in transformer that is connected to a power wire that is enclosed in the right support frame or channel. Polarity is important and has been pre-set by the connectors (if incorrect no damage will happen but the display and auto-stop will not work.)

From right side (frame top or bottom, depending on unit) the power wire enters the right channel where it is connected to the interior wiring during assembly.

From this connection, 9 volt DC power goes to both the auto-stop system and the display.

For the auto-stop system, negative voltage goes to the solenoid valve in the hydraulic unit and positive voltage is sent down to the lower channel where it passes through a micro switch that controls the auto-stop braking function. When the micro switch is activated by the climber's weight, the circuit is completed and positive current is sent back up to the solenoid valve that hydraulically brakes the wall.

For the display, a power wire plugs into the unit. A second plug receives the wire from a small reed switch, which is mounted on the upper channel next to the top shaft and activates the distance and time readout. Three paired magnets on the shaft pass close to the reed switch and trigger it as the shaft rotates sending a signal to the display.

Service Instructions

Lubricating the Treadwall®

The Treadwall panels slide down channels that should be lubricated bi annually, or more often if operation becomes sluggish.

1. Lubricant for exterior use (Garage Door lubricant) in a spray can is commonly available at auto supply and hardware stores. Also white lithium grease can be used indoors.
2. There are four channels to be lubricated. Two in the front and two in the back. Each channel has a rear surface and a front surface.
3. To lubricate the rear surfaces first put newspapers or a rag under the channels to catch drips.
4. Put the nozzle into the gap between two panels (fig 1) and squirt a little bit of grease onto the rear channel surface. Do this for all the gaps in the front and rear of the Treadwall (about 70 gaps total).
5. To lubricate the front surfaces (fig 2), put the nozzle in between the panel and the front of the channel and squirt a little grease at the top and bottom corners of the panel. Do this for each panel – front and rear.
6. Don't over-do the lubrication. Just little squirt is plenty.

Fig 1

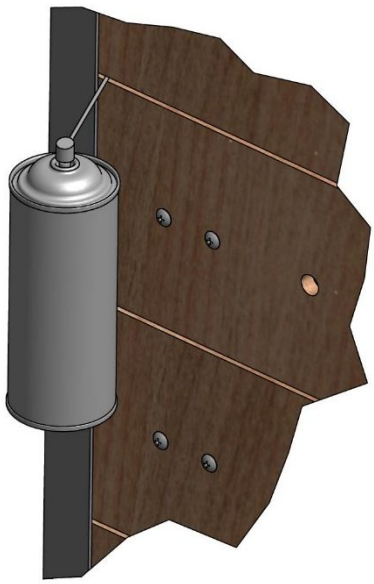

Fig 2

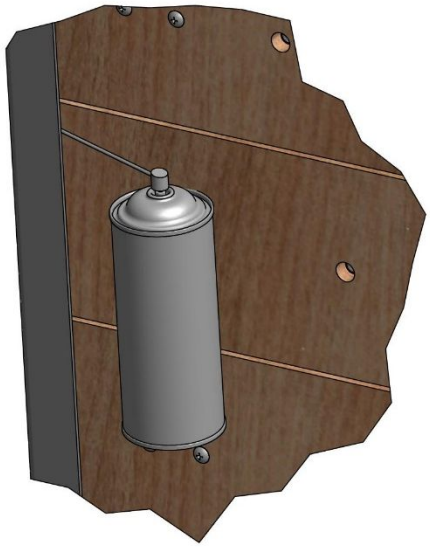

Safety Tips

Assembly Instructions

WARNING - Read all instructions before assembling and using the Treadwall.

For Assembly:

Be careful when moving and installing larger Treadwall components, as they might require effort to lift and attach. Some steps require two individuals. Have a second person assist you during assembly and make sure to have two ladders on hand. Several of the heaviest components need to be lifted to the top of the machine.

For General Use:

Carefully read and understand the Treadwall Owner's Manual. Provide a general overview of the basic operations and usage to new Treadwall users. Do not place other equipment or any items in the fall zone or onto the floor mat of the Treadwall.

Spatial Requirements:

Make sure there is at least a meter of clear space behind the Treadwall for assembly. Once the wall is upright you can move it into position if needed .

References to "right" or "left" refers to the unit from the front or climbing side.

Angle: The position of the center section of the Treadwall in relation to a vertical wall

Channels: Long metal pieces on either side of the Treadwall, where the panels slide

Digital Counter: An electronic display which tracks the climbers progress

Holds: The plastic or wood attachment that a climber uses to hold or stand on

Ladder Line: A wooden climbing hold that allows for easy and aerobic climbing

Mat: A foam pad which protects falls, placed under the Treadwall

Panel: A wood board that forms the surface of the Treadwall

Shroud: A cover at the top of the Treadwall

Speed: The rate at which a climber moves the wall down

Stiffener: A metal reinforcement behind the Treadwall panels

Assembly Instructions

Before Assembly:

The most important first step is to consider carefully the location of your Treadwall. A location that is too visible such as directly in front of members using Cardio equipment or walking in the entrance may discourage people from climbing. Often simply rotating the Treadwall slightly will dramatically improve usage. Look for a location that is visible but relatively discreet for the user.

The ground should be flat and level and the area directly around the Treadwall should be clear of any hazards for the climber or trainer.

Tools and help required:

You will need a helper(s) and possibly an 8-ft ladder. We provide a small tool kit with all new units that have tools that are not typically found in a tool kit. All the other tools are common.

Assembly will take 6-10 hours, please read the entire assembly procedure prior to installing. If you have questions contact us at 1-781-961-5200, 9- 5 EST.

Note: There may be some discrepancies in this manual as we are always improving details. Contact us if you have any questions.

Tools Needed:

1 - 1/2" wrench

1 - 9/16" wrench

1 – 3/4" wrench

1 – small 3/8" sockets for panels (tool kit has one)

1 – 9/16 & 3/4 sockets and socket wrench

1 – Allen wrench set SAE

1— Allen wrench set Metric

1 – Medium Crescent wrench

1 – Screwdrivers

1 – wiring pliers (good for working with master links on chains)

1 – Cordless drill with #2 Phillips driver bits

1—hand cleaner and rags

Helpful:

5/16" and 7/32" allen wrenches for a cordless drill (holds and stiffener bolts).

Tool Kit Provided:

1 – 3/8" panel wrench, custom

1 - 5mm allen key with ball end (brake adjustment)

1 - 3/16 Allen wrench for shaft collars on lower shaft

1 - 5/16" Allen wrench for holds

Note: Set screw sizes for reference only:

1.5" bearings: 4mm allen key

1" bearings: 3mm allen key

Sprockets: 3mm allen key

Assembly Checklist

- ◊ Assemble frames: Attach horizontals p 28
- ◊ Place alignment strap p28
- ◊ Left channel p 31
- ◊ Right channel p 31
- ◊ Top shaft p 32
- ◊ Top Shroud p 33
- ◊ Bottom shaft p 34
- ◊ Angle Cassette p 35-36
- ◊ Spacer bar p 373
- ◊ Internal X-bracing p 37
- ◊ Wiring harness p 38
- ◊ Remove covers off channels ((1) hydraulic box and (2) bottom access covers) p 38
- ◊ Install drive chain – initial tension p 39
- ◊ Install top half main chains p 40
- ◊ Rotate wall up to vertical p 40
- ◊ Attach angle cassettes and cables p 41
- ◊ Mount rear guard p 42
- ◊ Attach bottom half main chain p 42
- ◊ Mount angle dampener cylinder p 43
- ◊ Mount counter weights on rear guard p 43
- ◊ Main chain springs p 44
- ◊ Align frame and channels to match swing of angle cassettes p 45
- ◊ Display and Testing p 46
- ◊ Panel Stiffeners p 47
- ◊ Attach first 1 or 2 panels p 47
- ◊ Attach remaining panels except last one p 48
- ◊ Install bottom side covers – test angle swing again p 49
- ◊ Mount (optional) Ladder line set p 50
- ◊ Mount holds p 51
- ◊ Test climb 100 feet/30 meters
- ◊ Final check Pp 47
- ◊ Angle brake locking – adjust caliper if needed.
- ◊ Check drive chain tension again
- ◊ Auto stop
- ◊ Mount last panel, hydraulic box cover & access covers p 52
- ◊ Place mats P 53
- ◊ Set remaining holds and test climb looking for loose holds
- ◊ Perform any customer training needed
- ◊ Warranty p 54

<u>Hint:</u>

If you three or more persons. have someone assembling the panels and stiffeners while others are building up the frame and channels. (p 47)

Support Frame Assembly

Parts Needed

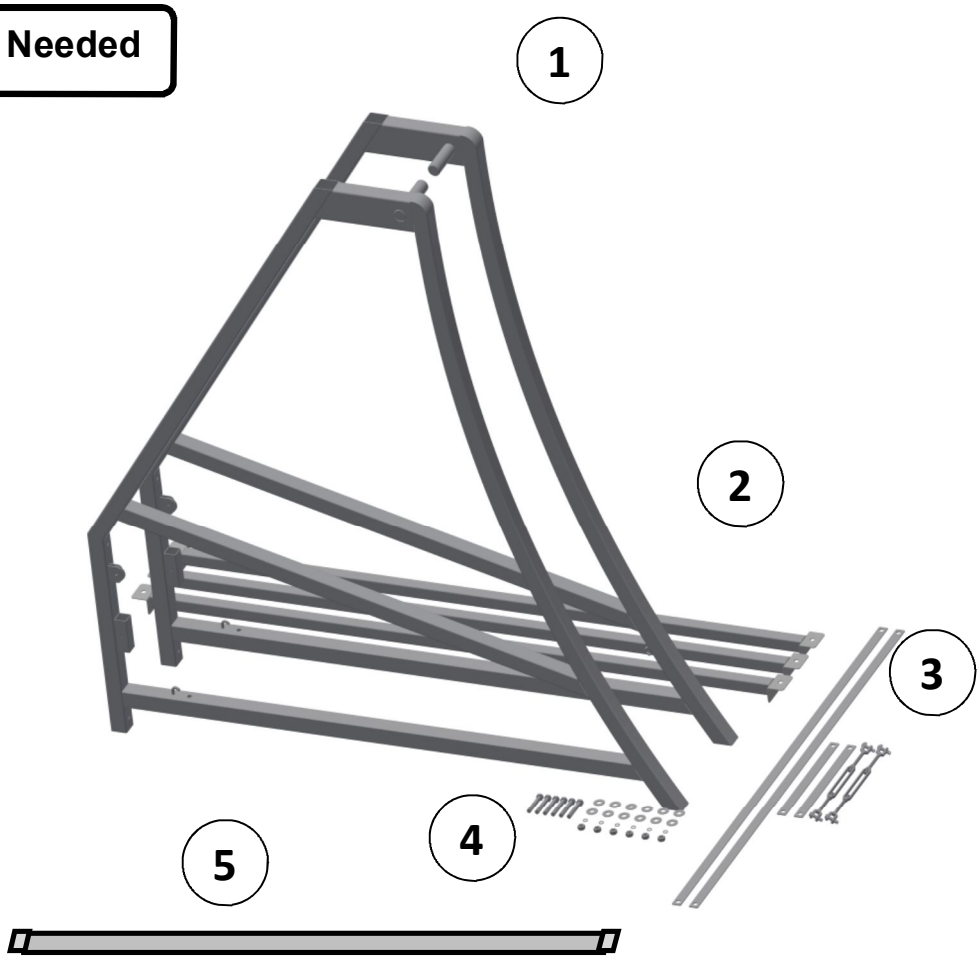

1	Side Frames (Max shown)
2	Horizontals (Max = 3 horizontals, S = 2 horizontals)
3	Frame X Bracing: there are 4 pieces, 2 long and 2 short (S frames) or 8 pieces, 4 long, 4 short (Max frames). Turnbuckles are in the hardware box. X bracing is packed with channels.
4	Hardware bag FT-10
5	Alignment Strap (flat strap with hooked ends, 4 or 6 feet long.

TREADWALL X-BRACE ASSEMBLY COMPARISONS

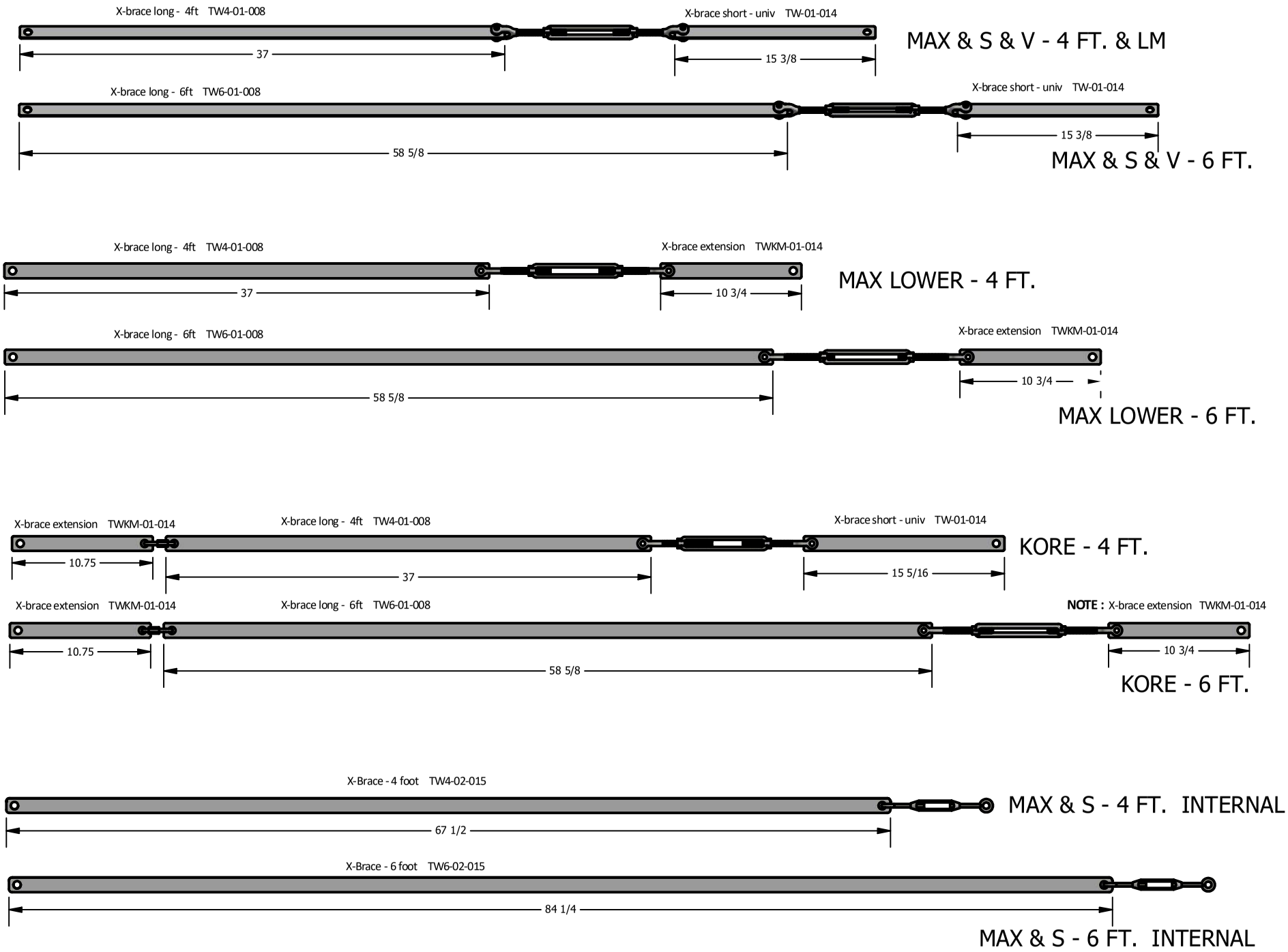

A-Frame Assembly

Assemble the two upper horizontals to the frames. Note the orientation of the right and left frames: curve to front, shafts/bearings inward (see images next page).

The frames have holes in the back legs for the upper horizontals. The main X-bracing goes on as shown, shorter pieces (15.25"/39cm) at bottom. The Max frame has an additional set of lower exterior X-bracing and a smaller short end (10.75"/27cm) and a third horizontal.

There is a power wire pre-installed in the right frame: <u>be careful not to pinch the wire when assembling the horizontal bolts</u>.

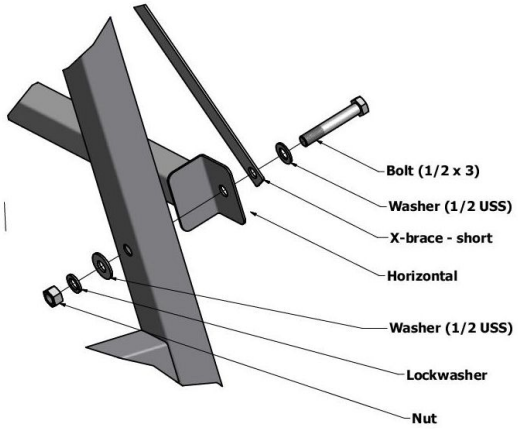

The turnbuckles attach between the long and short X-braces, **short X-brace pieces at bottom**.

Before attaching the turnbuckles, turn them out so that they are close to their maximum length.

Turnbuckles are adjusted by holding the two ends and turning the center section.

When the turnbuckles are tight, they should be the @ same length. They will be re-adjusted at the end. For now, just hand tighten firmly.

NOTE: the Max units have the second set of exterior X-bracing. <u>Leave these loose while aligning frame</u>. You will tighten these at the end.

The Max frames also have a third horizontal at the bottom. This is to help with frame alignment.

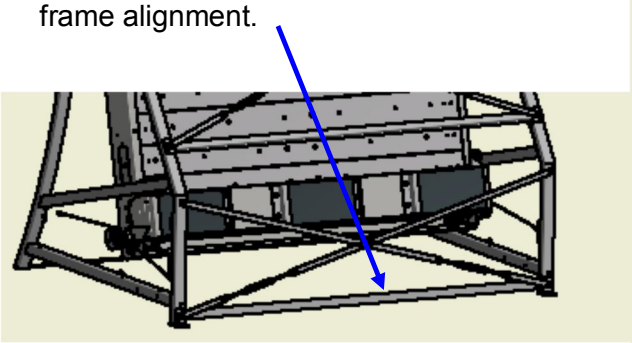

The Alignment Strap goes between the front legs and hooks into slots in the feet. This will set the exact spacing of the front frames.

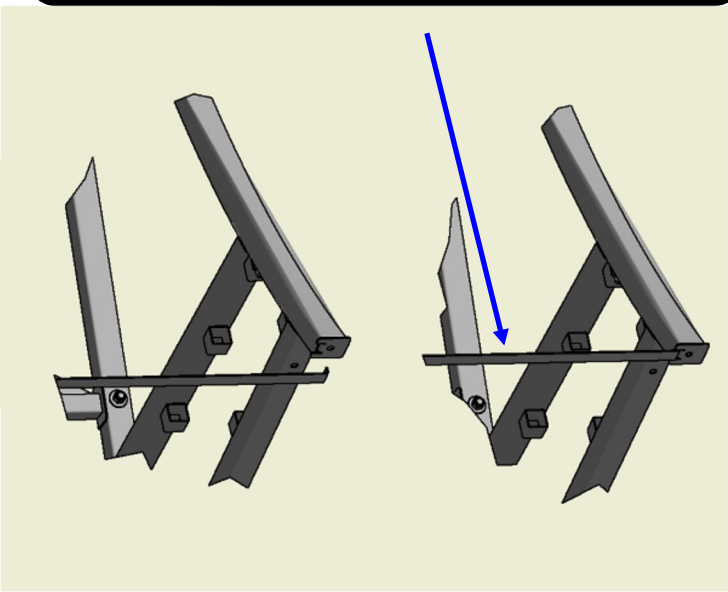

A-Frame Assembly

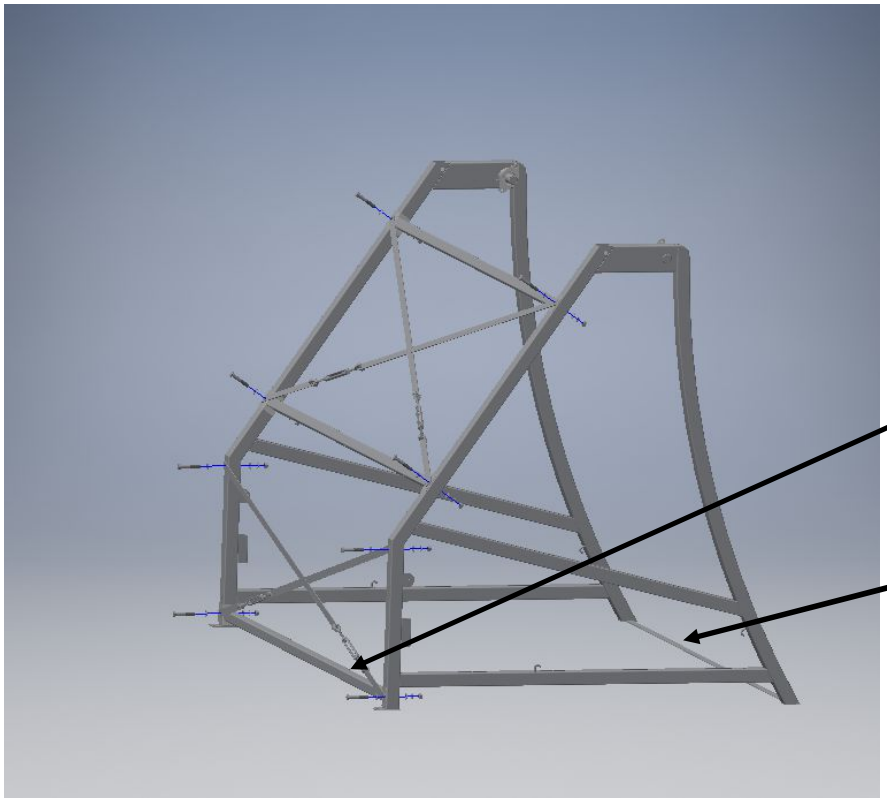

Max frame assembly showing the second set of lower x-bracing and the third horizontal at the bottom. The turnbuckles go on the lower ends. Note the alignment strip at the front between the front feet..

Third horizontal and lower x-bracing with shorter extension piece

Alignment strap

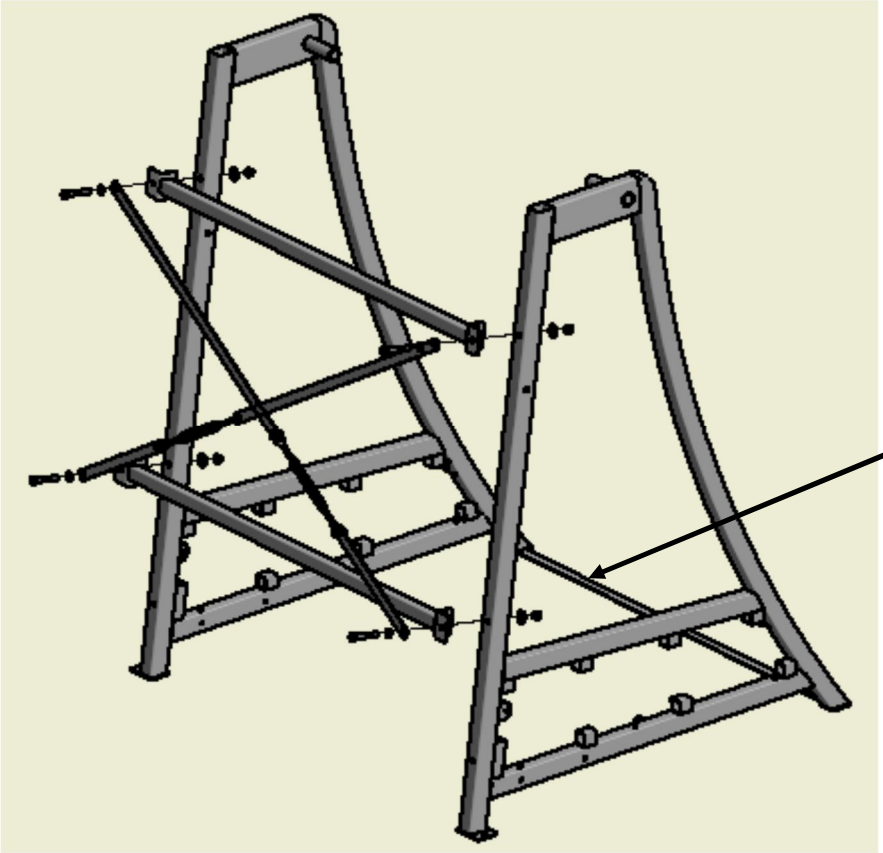

S frame assembly showing the assembly parts. The turnbuckles go on the lower ends. Note the alignment strip at the front between the front feet.

Alignment Strap

Main Channel Assembly

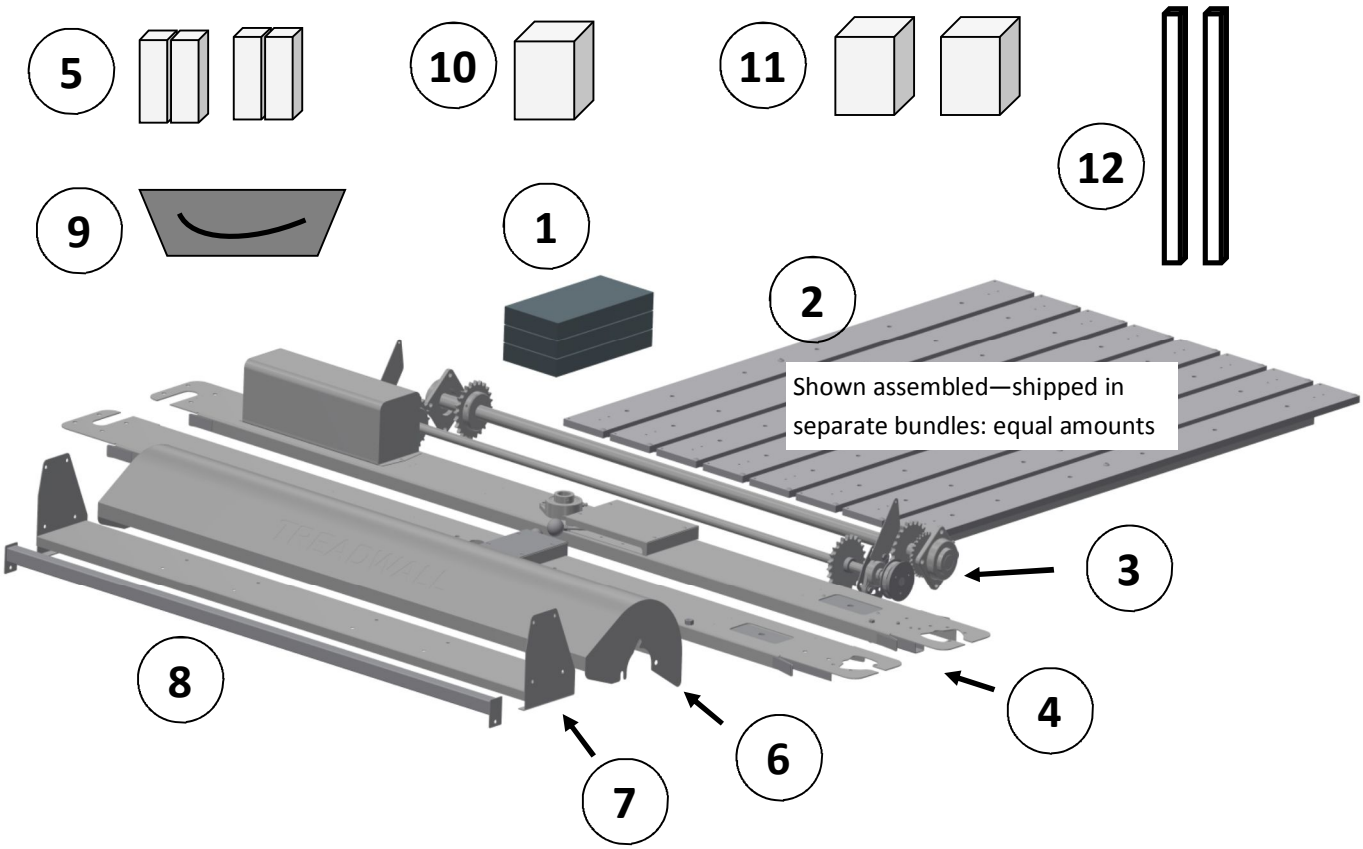

1	Concrete counter weights
2	Panels and metal stiffeners (#36, #40, #44 depending on wall size)
3	Top and bottom shafts
4	Right (with hydraulic box) and left channels
5	4 chain boxes
6	Top Shroud
7	Back Guard
8	Spacer bar
9	Side covers (4, black plastic)
10	Hardware Box
11	Pro Package (Holds, Ladder line Set) Boxes
12	Pro Package (Mats: one or two depending on model)

Main Channel Assembly

The next steps involve lifting and installing the channels and their parts.

Start by mounting the channels: there is a right and left channel. The right channel has the hydraulic box and speed lever. It is good to pad the top horizontal. The channels have a shaft hole through which the end of the bearing shaft goes: this helps when mounting. Note: the right channel will swing back due to the weight of the hydraulic box: make sure to hold it while mounting. The left channel will tend to stay upright. Bag FT-20 has the bolts.

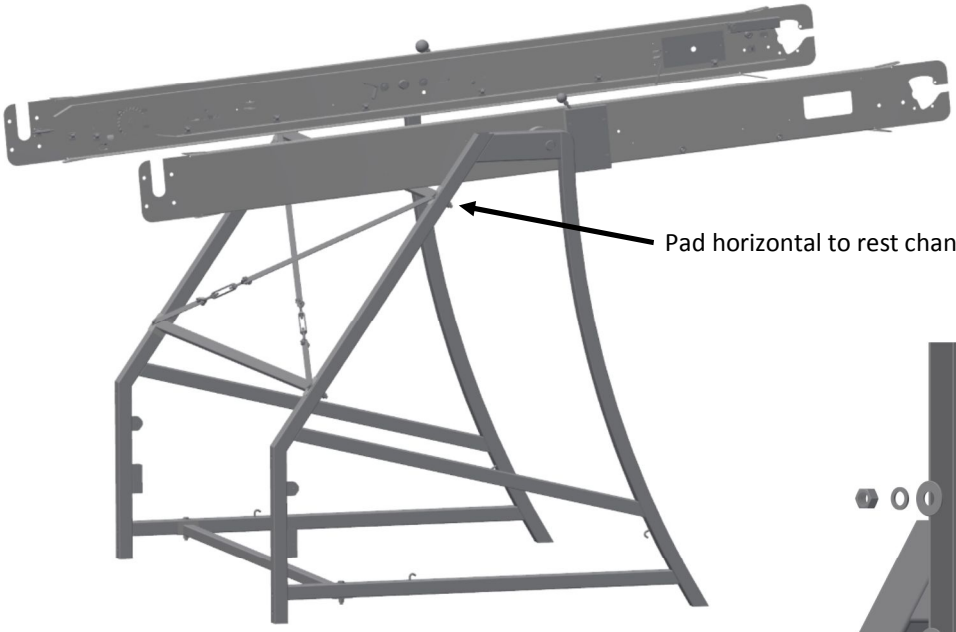

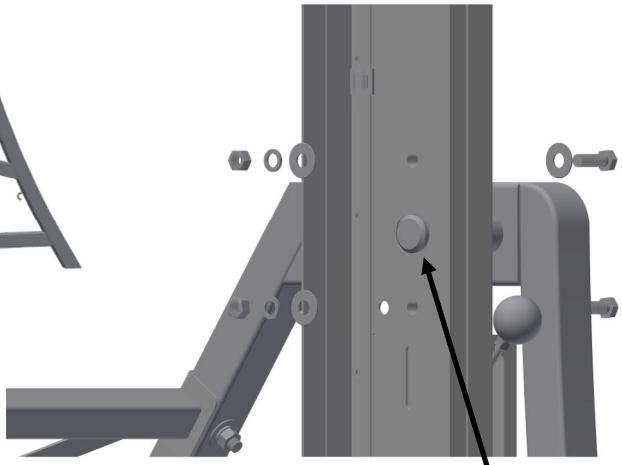

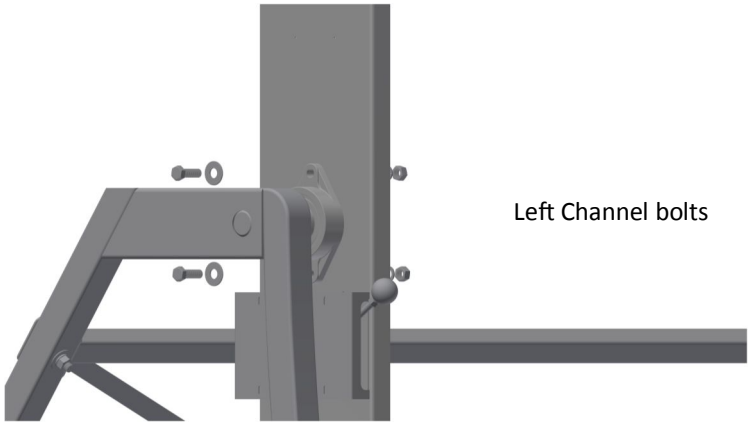

Main Channel Assembly

Mount the top shaft. The shaft has a right and left side: the right side has TWO sprockets. Install the #2, 3 and #4 bolts, washers and nuts per diagram (Bag FT-30) — leave as loose as possible so that the shroud can be slipped under the bearing in the next step.

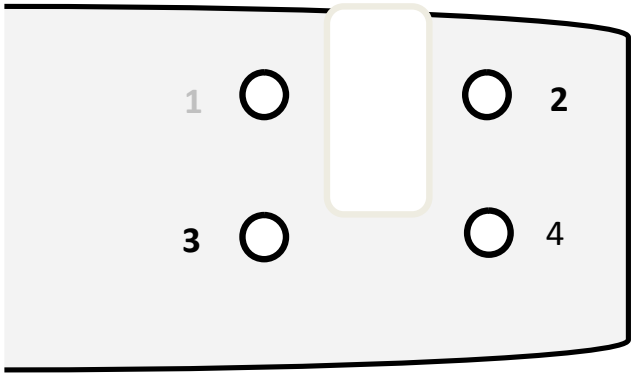

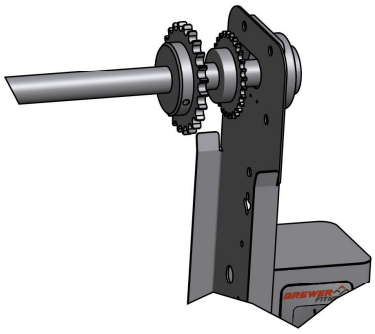

Right side of shaft with two sprockets

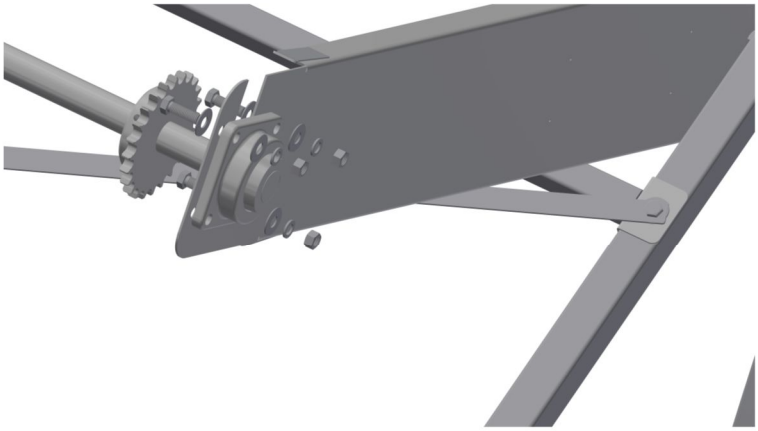

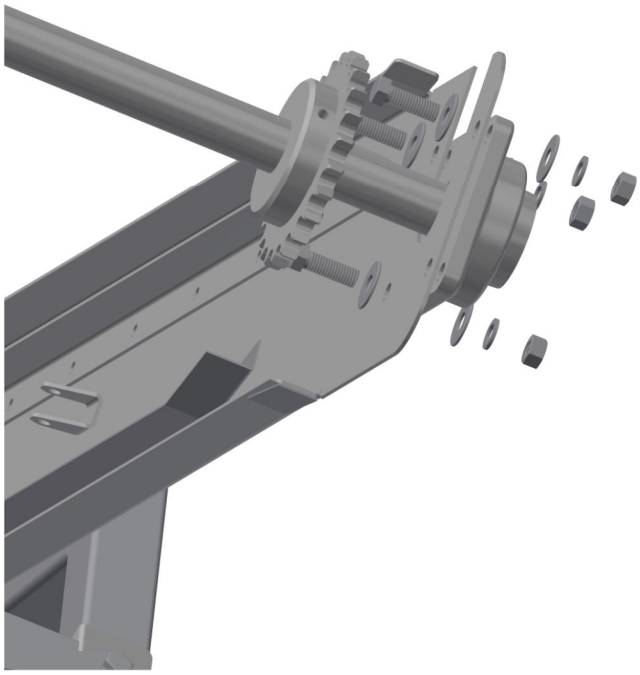

Main Channel Assembly

Mount the top shroud. Using two persons, slide the shroud under the top bearing (brush to front) and insert #1 bolt. Then pivot the shroud down and the shroud slots under bolts #2 and #4. When it is firmly pushed forward all the way, tighten bolts #1, #2 and #4. As the final step, tighten bolt #3.

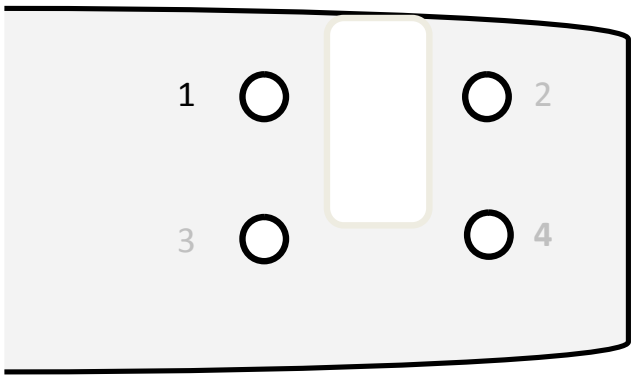

Slide the shroud **under** the bearing and Insert the last bolt (#1) in both sides through the hole in the shroud ends.

Use this bolt to pivot the shroud down sliding the slots under bolts #2 and #4.

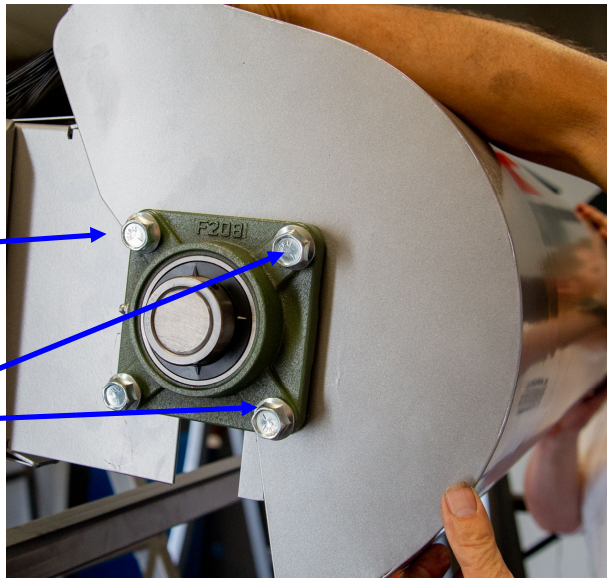

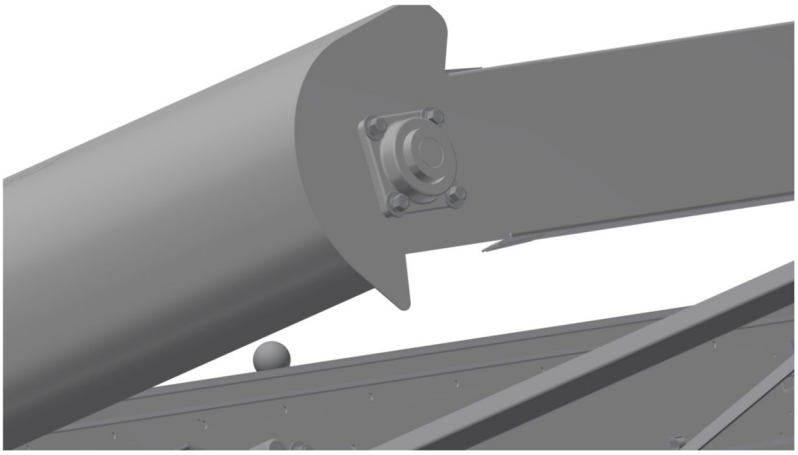

Rotate the shroud up and the slots into the pre-installed bolts. Holding the shroud tight in place tighten bolts (#2 and #4) firmly. Tighten #3 after shroud is mounted.

Lower Shaft Assembly

Install the lower shaft into the bottom of the channels. The shaft has a left and right side - the side with the brake disk goes to the left.

The left sprocket and brake disk are loose: slide these on the shaft towards the center (5" /12cm) so they are out of the way.

Using two persons, slide the shaft into the bottom of the channels. The black metal plates go on the outside of the channel. The black plate has a slot in one side: slide the slot end in first then rotate the shaft so the slots face to the front (top at this point). There are three bolts (Bag FT-50 or on the shaft already) that attach the black metal plates to the outside of the channel. The holes only line up one way—you cannot install backwards.

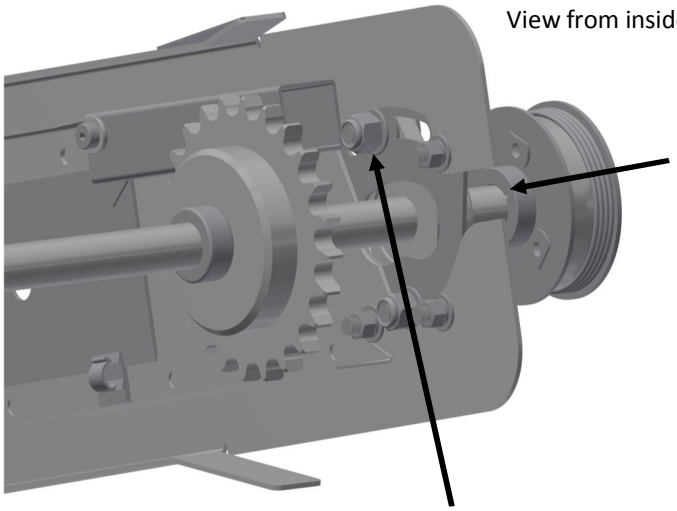

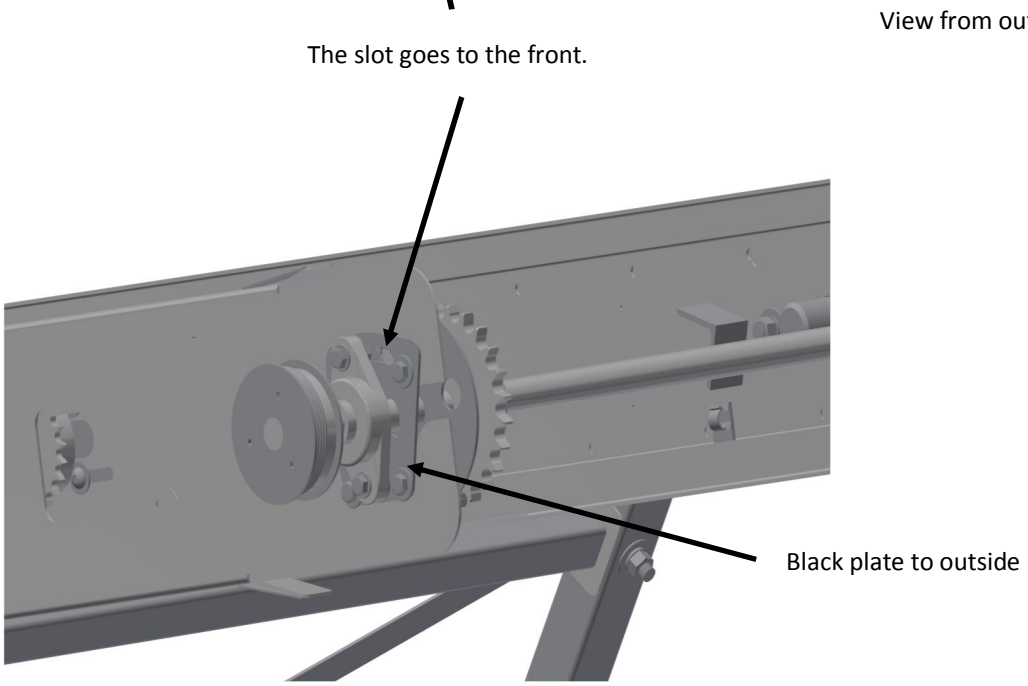

Angle Cassette Assembly

Unpack the brake caliper that is attached to the left channel. This will be mounted on the brake disk and then the entire caliper/disk assembly will be moved towards the channel and bolted to the bearing. This allows the brake to "float" with the shaft.

After adjusting the disk and the caliper, everything will be tightened to the shaft,

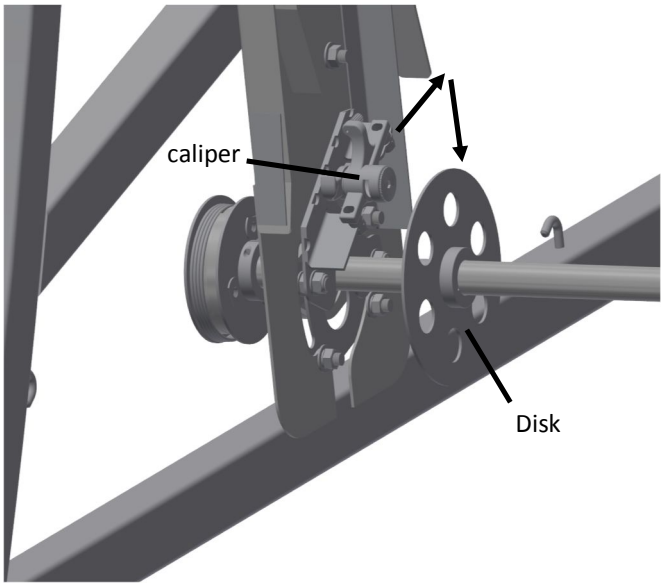

Unwrap the brake caliper. It is attached to left channel by the control cable.

The following is best done when the brake disk is moved 5" -6" (10-12cm) away from the channel.

Have one person hold the angle lever down (open). Mount the brake caliper over the disk: this might take a few attempts. The caliper will slide down onto disk fully.

Once the disk is mounted on the caliper, release the angle lever and slide the assembly towards the bearing/channel until the caliper plate holes align with the two bolts on the metal bearing plate. It will only fit one way: you may have to rotate the brake assembly. Using the two nyloc nuts (self-locking nuts, Bag FT-50), secure the caliper to the two bolts and tighten firmly.

Make sure NOT to tighten the nuts on the same bolts that hold the bearing on the plate—these

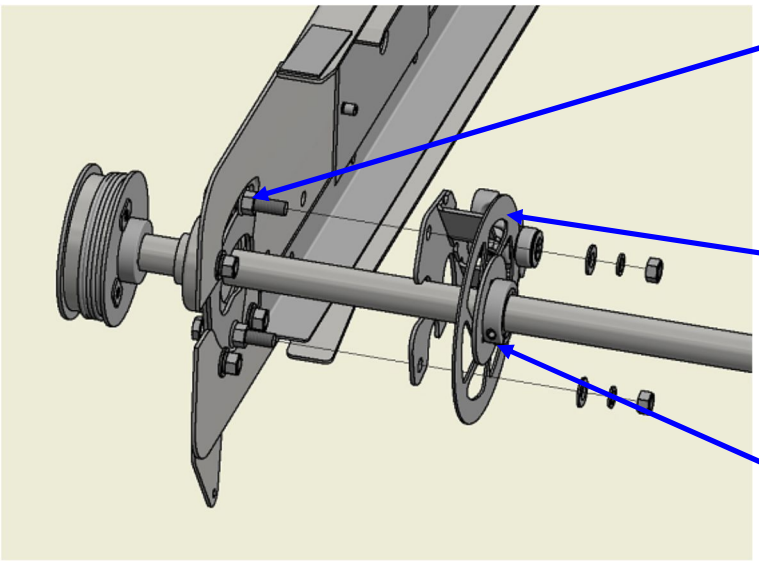

Sprocket not shown for clarity

Once the caliper plate is attached, hold the angle lever open and rotate the disk on the shaft by hand inside the caliper. Adjust it's position so that it rotates freely both ways. Take your time to find the best position for the disk.

Using 3/16" Allen key, tighten the brake disk very firmly on the shaft after adjustment above.

Angle Cassette Assembly

To adjust brake after assembly:

Once mounted, adjust caliper by holding down the angle lever, then tighten the adjuster nut until it stops, and then back it out (reverse it...) 1/4 turn (5 mm Allen key - in tool bag). The angle lever must be depressed during procedure. If you try to adjust the adjuster nut with the lever up (closed) you can damage the nut.

While still holding the lever down (open), spin shaft to test: it should spin freely. Release the angle lever (up) and the shaft should lock up and not turn. Re-adjust if needed. Two persons are very helpful.

Once all set, make sure to re-tighten one more time the collar that locks the brake disk onto the shaft securely.

Finally, slide the sprocket to the left - this will be aligned later. It has no set screw.

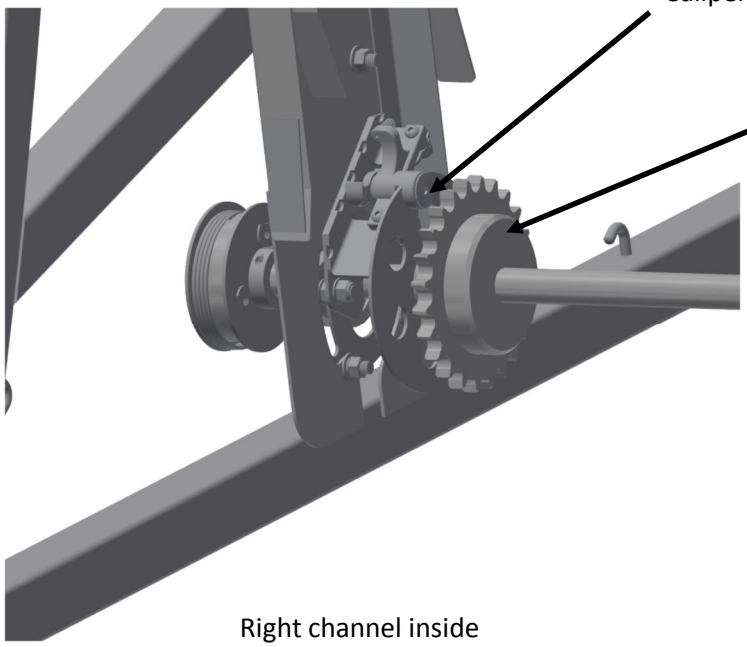

Slide the left sprocket over after all adjustments are done. Note: this sprocket has no set screw—it will self align when the chain and panels are mounted. Page 39.

Right channel inside

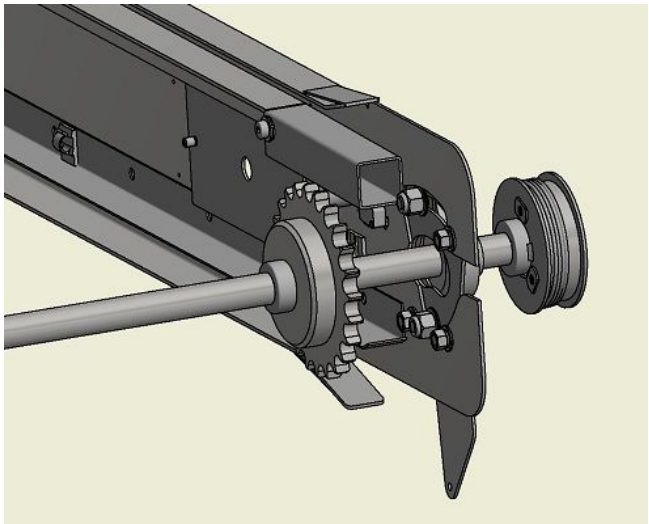

Right channel outside—make sure bearing is free to swivel and these bolts are loose (both sides)

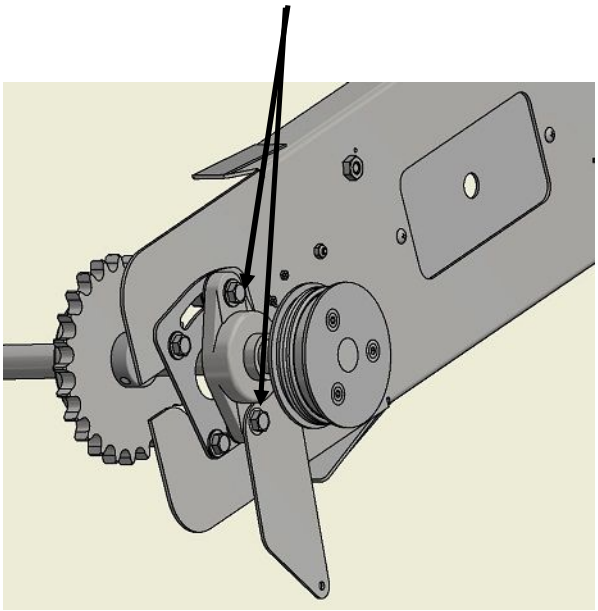

Spacer Bar & Internal X-bracing Assembly

Install the spacer bar. This is a plain bar that rest on two "V" shaped supports and holds the channels apart at the correct width.. There is double sided tape on the inside of the "V" supports—peel off the while tape cover and push the spacer bar down on each side into the "V" support brackets. It is tight and may require some force to get the bar into the brackets.

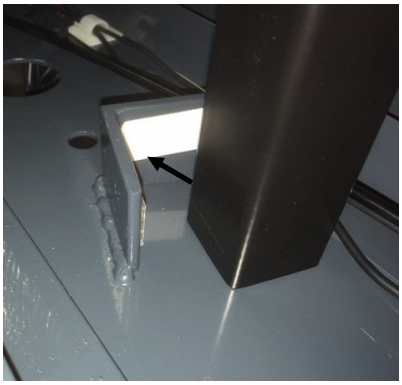

Mount the internal X-Bracing as pictured one on each side of spacer bar. The turnbuckles go at the bottom. Adjust the turnbuckles to @ full length before installing them. There are lock-nuts on the turnbuckles which are tightened firmly later to prevent them from loosening up. Hand tighten for now.

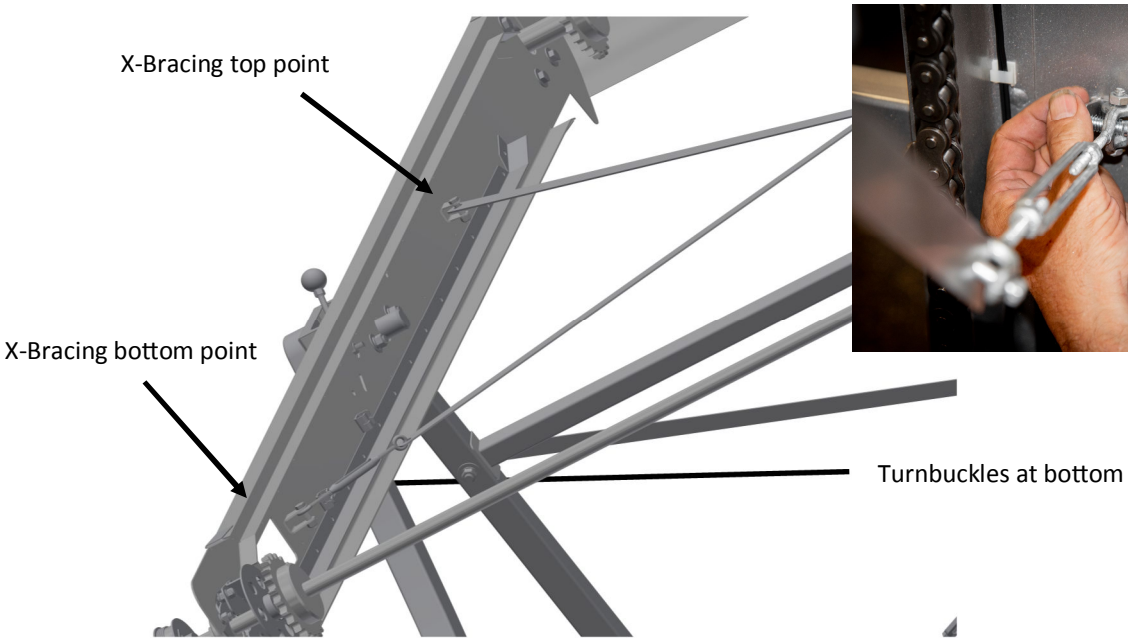

Wiring and Sensor Assembly

Bring the power wire from the top of the right A-frame through the black rubber grommet on the channel near the top of the frame and feed into the channel.

The grommet ship installed: use a small screw driver to pry is out, feed the power wire in and re-insert the grommet Inside about a foot below the grommet, plug it into the main wiring harness. There is only one place the plug can go.

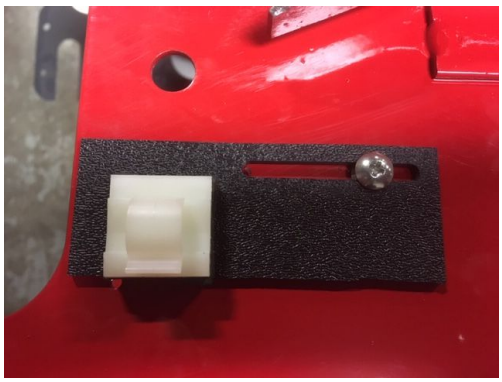

There are three magnets and one mounted sensor in the hardware box. The three paired magnets are placed evenly around the upper shaft, between the channel and the small sprocket. Keep them clear of the channel. Place them flat side down and they will stay on by magnetic attraction. A paper guide should be on the shaft.

The sensor and plate is screwed into the channel using the slot. The sensor is plugged into the harness pre-mounted on the channel. Adjust the plate so that the magnets pass about 1/8" above the sensor tip. Tighten the locking screw firmly.

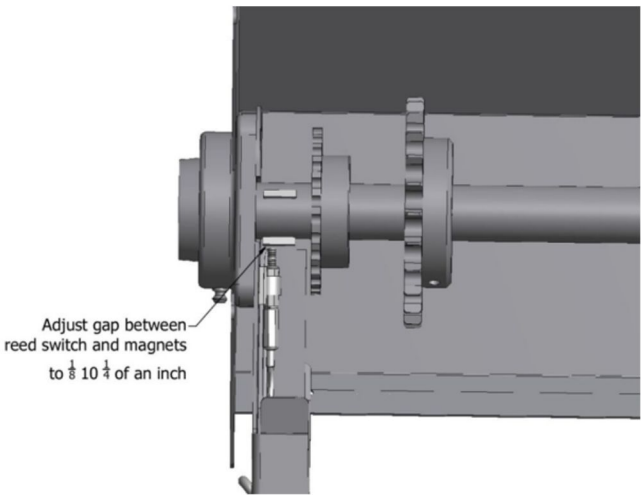

Remove the hydraulic box cover and bottom access plates. Leave all off until the end of assembly.

Hydraulic box cover shown removed

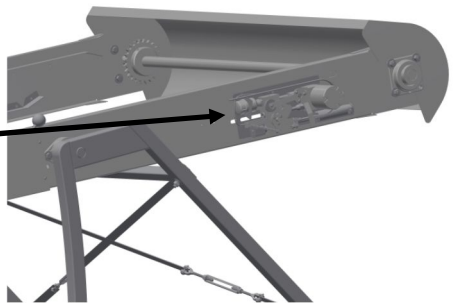

Drive Chain Assembly

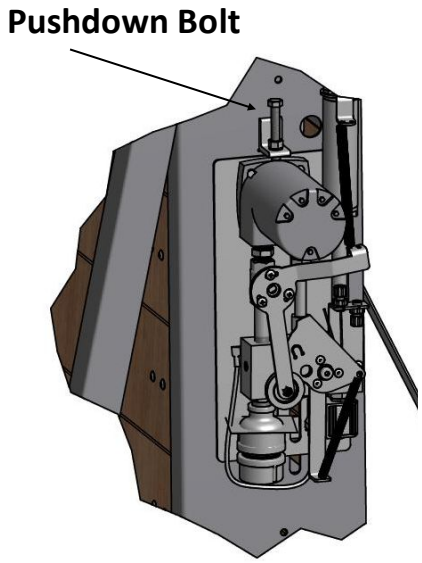

Remove the cover at the top of the right channel.

The hydraulic pump is mounted in slots so it can slide up and down. Make sure it is as high as it can be.

Install the drive chain between the pump sprocket and the main shaft as shown. A master-link is provided to connect the chain.

Once the chain is attached, lower the pump to take up the slack. There is a long push-down bolt above the pump. Adjust it down far enough to take out the slack in the chain, but don't make it too tight. Too much tension will make the Treadwall run sluggishly. Tighten locking nut.

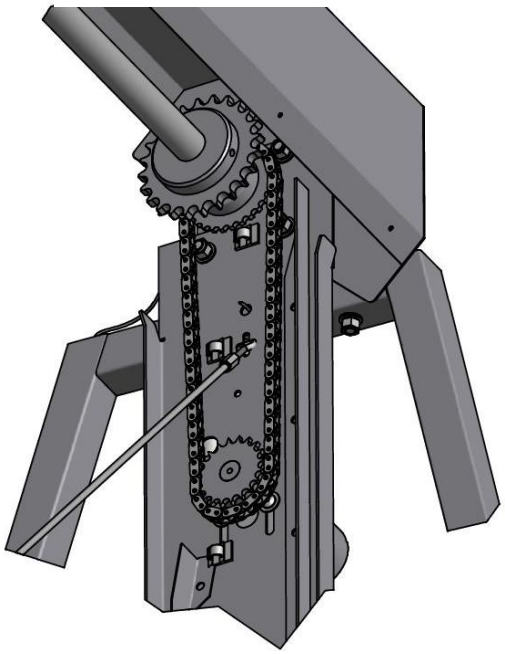

To disassemble the master-links use a pair of pliers or a flat blade screw driver to press and slide the retaining clip along the side plate in the direction opposite the open end of the retainer clip.

To install the Master-links assemble them as shown in the diagram below. The retaining clip must fit into the small grooves on the master-link. Then, press and slide the retaining clip into position towards the open end of the retaining clip.

When correctly installed the retaining clip is solidly in the grooves of the master-link laying flat against the side plate.

The same style master-link is used on the drive and main

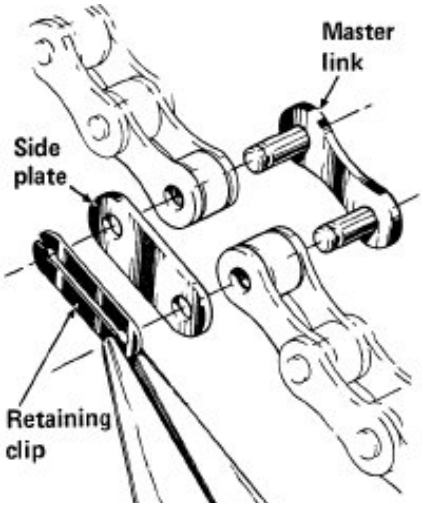

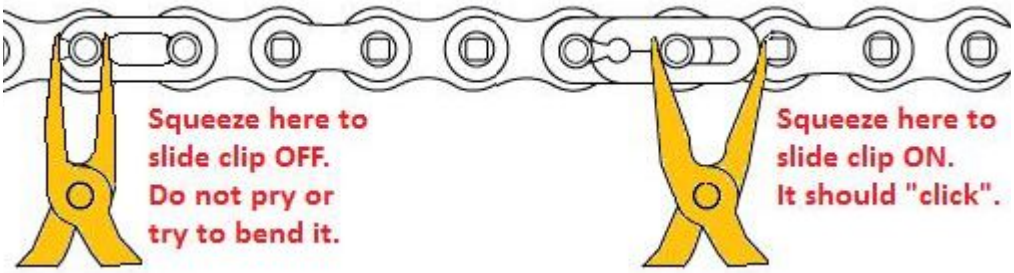

Main Chain Assembly & Rotating Wall

Each main chain side come in 2 parts. Hang one section on the top shaft. Tabs face out. Make sure the tabs are aligned and synchronized on the sprocket by carefully lining up the tabs side to side. This will take a few minutes. If they are not aligned, the panels will be crooked.

The chains have a short and long end (2 or 4 links at the end: it is best to have both sides the same orientation.

Carefully rotate wall back towards vertical. By twisting the channels and slipping the ends of the bottom shaft into one side then the other, the bottom shaft can be placed inside the frame to its final location. This takes two-three persons. When done, one person holds the channels.

HINT: The Max4 and S4 *may* require the horizontal bolts be loosened slightly to allow the frames to be spread (Leave the external X-Bracing hand tight). If this is not enough, temporarily remove the spacer bar when lowering and twisting the channels into the side frames.

Bottom shaft will end up inside frame area. By swinging wall side to side, the shaft end can be maneuvered into the space. It is tight. The 4 foot units can be harder.

Top half of chains will hang down.

Angle Cassette Assembly

Attach the angle cables on each side. Do one side at a time. This requires attention to detail.

Bag FT-60 has (2) turnbuckles and springs: open up the turnbuckles to their full length before mounting. Have one person hold the wall in a vertical position (straight up and down).

Remove the angle cable pulley from its bracket. Cut the wire tie holding the cables on the cassette and release the cables. Wind the back cable (the cable that goes to the back) on the correct side of the cassette (see diagram). It is @ one wrap when wall is in the middle.

Remove the angle cable pully and place the cable into the pulley bracket. Replace the pulley. Attach a spring and turnbuckle to the end of the back cable and hook the turnbuckle on the turnbuckle hook.

Rewind the front cable on the correct side. With one person pulling on the wall, pull the front cable loop over the front angle cable hook. This may require a few tries to accomplish.

Repeat on the other side. Tighten both cable spring turnbuckles: they should be firmly tightened so that the spring is extended @ 5/8 inch/16-17 mm. Test by changing the angle gently 6-8 times.

Left side of a Treadwall

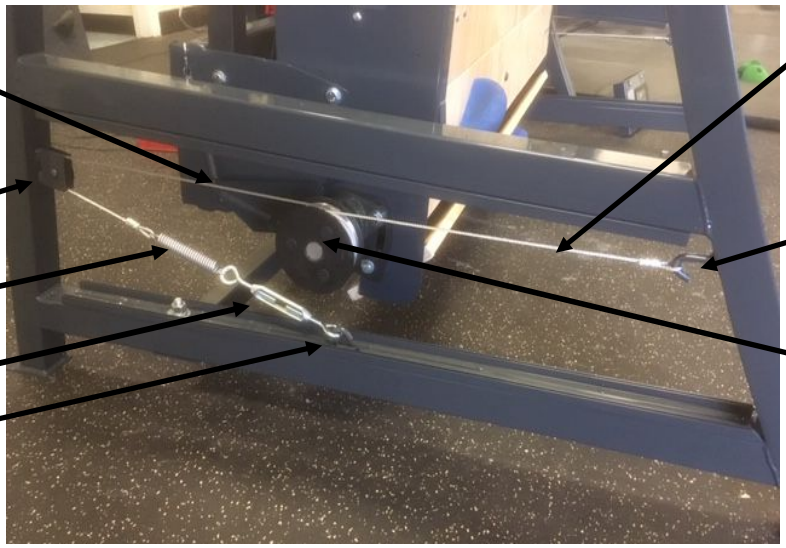

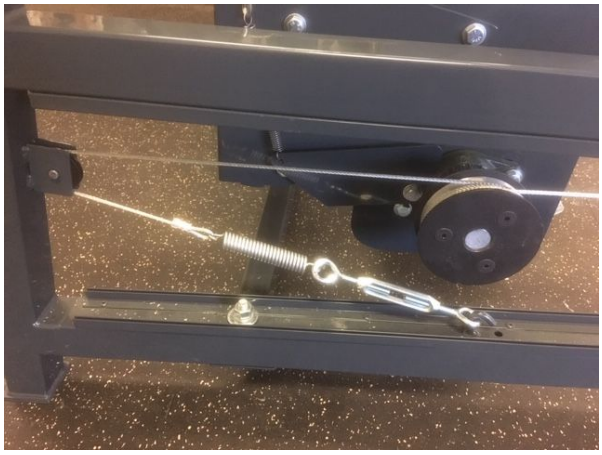

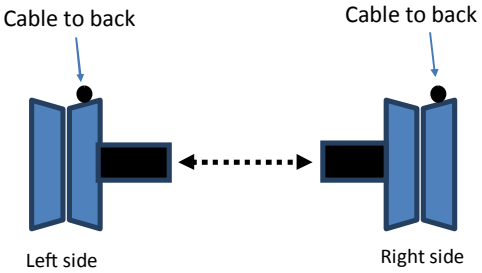

Looking from the front of the Treadwall, the correct cable winding: Cable to back is always on the right side looking from the front.

Rear Guard & Main Chain Assembly

Mount the rear guard. Bag FT-40 has the bolts to mount the Rear Guard and associated parts. Note orientation—top and bottom.

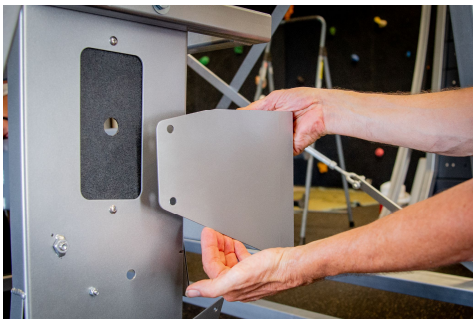

Attach the bottom half of the chains. Start by attaching the back half of one side, making sure the ends are correct (correct length between tabs). Loop chain under the bottom sprocket and <u>while lifting up the bottom shaft</u>, attach the front half of the chain.

Repeat on the other side. Note: the sprocket on the left side has no set screw, and you have to move it to line up with the chain. After you put on the first panel you will align this sprocket to its final position. One last time: re-check that the tabs on the two chains are synchronized—that they are level side to side

Attaching chains

Making sure the tabs are spaced all correctly

Check chains area synchronized: tab are level with each other on both sides. Use the spacer bar as a guide.

Angle Dampener & Counter Weights

Mount the Angle Dampener Cylinder on the left side of the unit (Max and S units). There are two bolts in Bag FT-61.

Attach the bottom of the cylinder, LARGE END UP, as shown in diagram below.

The cylinder comes with wire ties: when you cut these it will start to extend. Cut the ties and as the cylinder extends, line up and insert the bolt and spacers at the top end. It is easier to hold the cylinder in position while lining up the top hole.

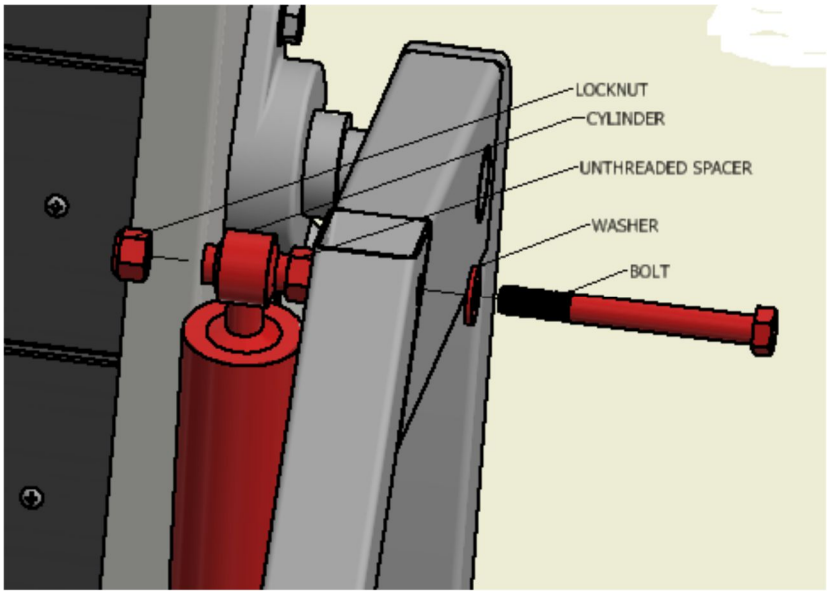

Attach the counter weights to the back guard (Max and S). There are 3 on the 6 foot units, 2 on the 4 foot units. Using the bolts in bag FT-42 and the brackets in the Hardware box, attach the concrete counter weights.

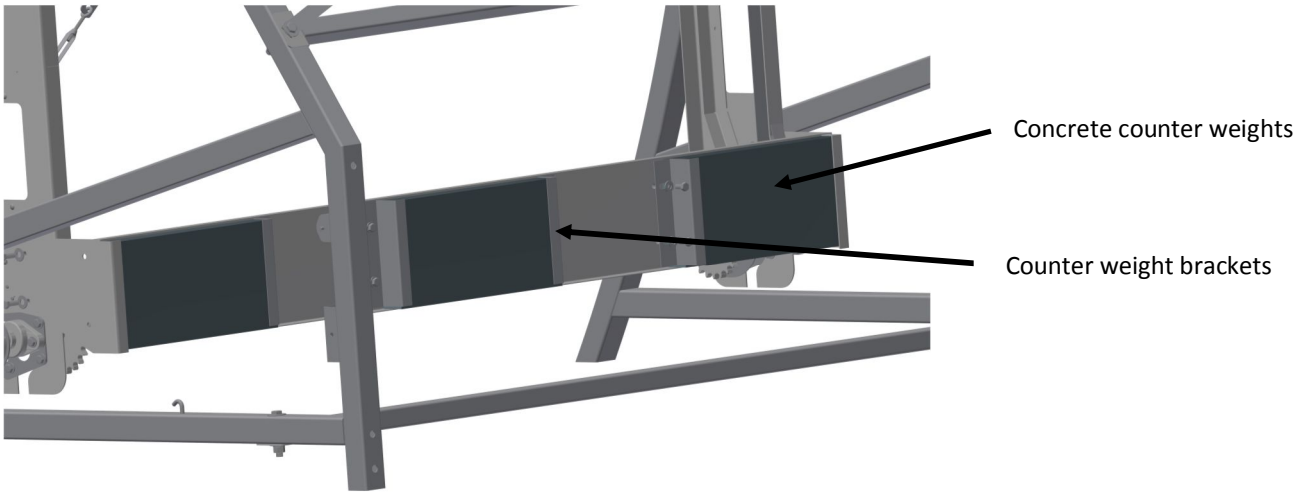

Main Chain Springs & Bumper Mounting

Strong springs hold the chains in tension.

You will find springs and "S" hooks these in bag FT-40. Attach on each side as shown. The cord in the bag is used to help lift hook into place over the TOP edge of the rear guard side.

Mount the bumpers on the rear guard sides.

There are two bumpers on the hardware box and hardware (Bag 41 or 42 depending on model).

Make sure the rubber bumper faces back and contacts the lower horizontal.

Frame Alignment

Align the frames and channels. The Angle Cassettes need to move in the correct alignment inside the frames. This can be tricky—take your time to get this correct.

Start by adjusting the internal X-bracing so that the two turnbuckles are the same length on each side. Make them hand tight. They may need to be re-adjusted.

On the Max frame, there are two sets of frame X-bracing: the main (top) X-bracing and the extra lower x-bracing. Leave the lower X-bracing loose for now.

This is the goal: when the wall angle is changed the two angle cassettes have to move inside the frames front to back. This may require numerous adjustments to get correct. This is important.

1. Swing the wall to the back. Using the main frame X-bracing, adjust the turnbuckles to align the two angle cassettes inside the side frames. If you need the channel to be closer to one side, loosen the opposite turnbuckle and tighten the turnbuckle on the side you want to make closer.
2. Move the wall to front: re-check alignment. You may need to use the internal x-bracing to adjust the wall at the front. Re-test at all angles and re-adjust as needed.
3. When finished, tighten the main turnbuckles firmly. On the Max frames lower external X-bracing, hand-tighten the turnbuckles only. Tighten the locknuts on all turnbuckles (angle cables and internal) to finish. Do not use a tool to tighten these.

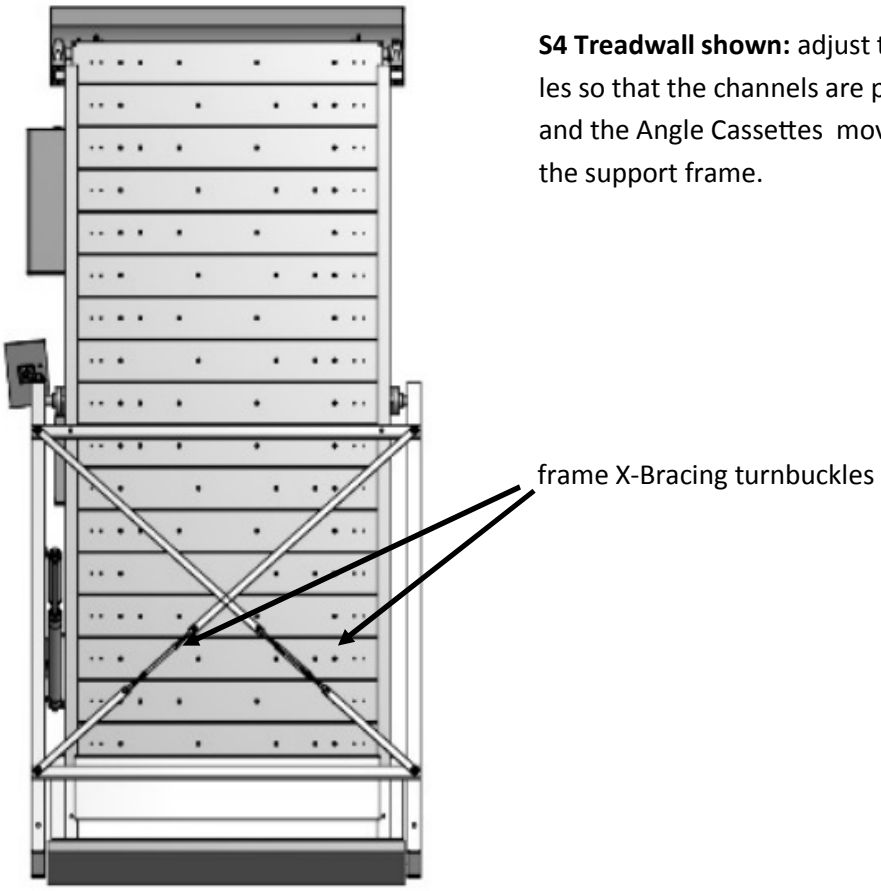

S4 Treadwall shown: adjust the frame X-Bracing turnbuckles so that the channels are parallel to the support frame and the Angle Cassettes move front to back aligned inside the support frame.

Initial Testing of Systems

Mounting display with strap bracket: make sure the rubber padding goes around the frame, adjust the height as desired, and secure the Velcro strap tightly.

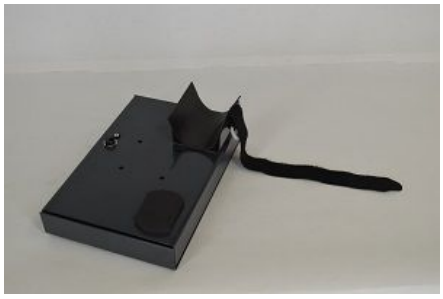

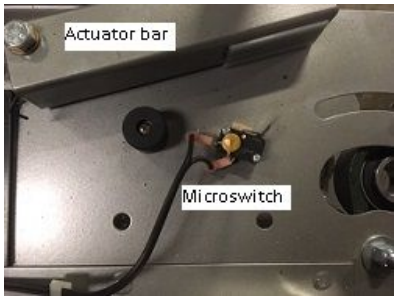

INSIDE VIEWS: actuator and microswitch arrangements.

Open - switch not activated, wall rotating

Closed - switch activated, brake on, wall stopped

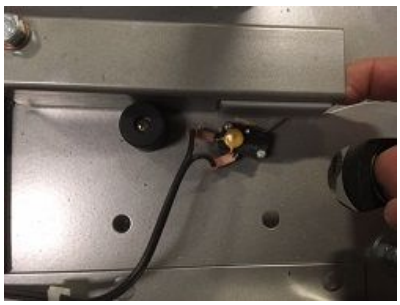

Mount the counter-timer on the right frame: there is a bracket with strap. The sensor wire and power wire are pre installed and plug directly into the rear of the counter.

Plug in the transformer: and do the following tests:

- ◊ Make sure display turns on—few seconds are required. Touch the screen if needed to activate.
- ◊ Slide speed lever to fast, push in auto stop actuator at bottom (see images to left) while pulling down on the main chain and verify the chain is stopped. This tests the auto-stop system.
- ◊ The display should start to count once the chains move 2-3 feet. Adjust sensor at the top if needed.
- ◊ Re-check the angle cassette alignment by changing the wall angle over the full range—The two cassettes should travel inside the frames front to back. Re-adjust X-bracing as needed.
- ◊ Check the drive chain tension—adjust push down bolt if needed. Do not over tighten—the chain should have @2 cm flexibility.

Panel Assembly

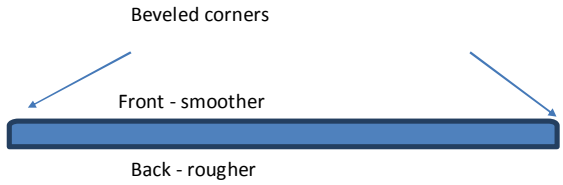

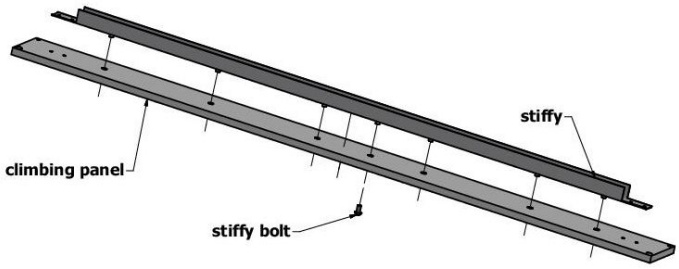

Each panel has a metal stiffener that must be mounted on the back side before installing the panel. The front side has a beveled corner edge.

Place the panel face down on a piece of cardboard, line up the stiffy, and press it into place - stepping on it with your foot if necessary.

A short round-head "stiffy bolt" is screwed firmly into the middle hole from the front of the panel as shown to hold it in place.

The best tools to use for installing panels: A battery powered electric drill with a #2 Philips bit and a socket wrench with a 3/8" socket. Do not overtighten the screws. If your drill has a clutch, use a low setting so that the head of the screw seats down but does not dig into the panel.

Pay attention when putting the panels in to alternate between having a wide or narrow gap between the right most holes.

After installing the first panel, pull down on the chains to rotate the panel completely around the circuit. As it passes the lower shaft, adjust the sliding left sprocket to the proper width so that the panel passes easily without binding. No set screw is used for this sprocket.

SEE THE PREVIOUS PAGE BEFORE ADDING MORE PANELS - CHECK AGAIN TO MAKE SURE THE DISPLAY IS COUNTING AND THEW AUTO-STOP IS WORKING. WHEN THE FIRST PANEL GOES AROUND.

Older M6 Pro unit shown

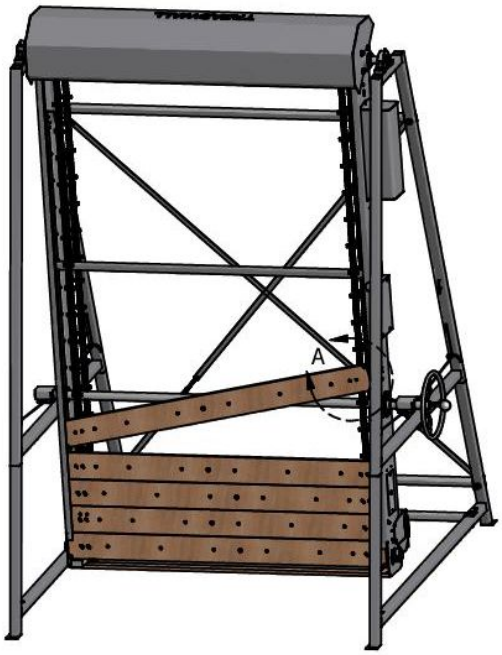

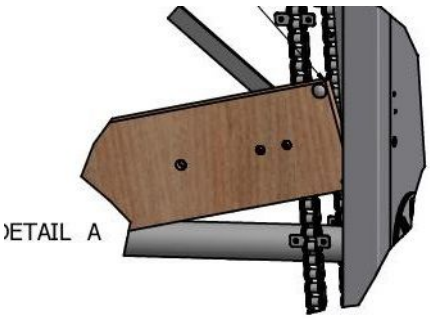

Panel Assembly

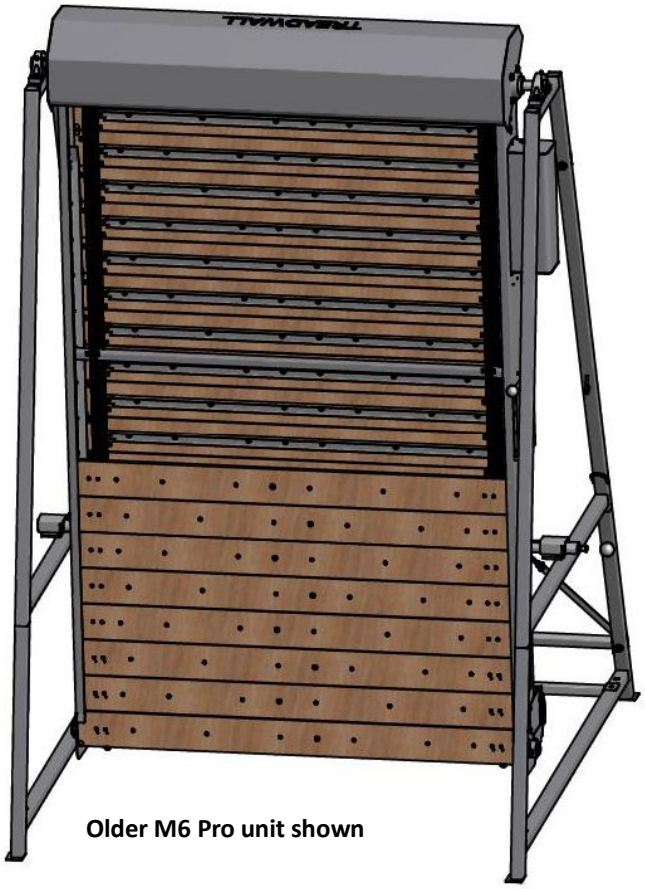

Older M6 Pro unit shown

Continue installing panels, alternating the hole spacing. Use the speed control lever to control the descent of the panels.

NOTE: TAKE CARE NOT TO CATCH THE END OF THE PANELS ON THE CHANNEL EDGE AS YOU LOWER THEM INTO POSITION: you can split the panel ends

As you install panels they will move down by their weight. There will come a point where they start to move up of their own, and then you will have to push them down - harder and harder as you put more on. This is because there are more panels at the back of the wall - heavier than the panels in the front.

When this happens, insert blocks of 2x4 wood between the bottom panels as shown below to jam the wall and prevent it from backing up. Use two blocks - one at each

The last three panels are put in from the bottom, slid up to meet the other panels, and bolted on.

Remove the black covers from the rectangular access holes at the bottom of the channels so you can get to the inside when putting on these last three panels.

<u>Leave the last panel off until the end of the installation</u> - after the climbing holds have been put on and everything has been tested according to the check list at the end of these instructions.

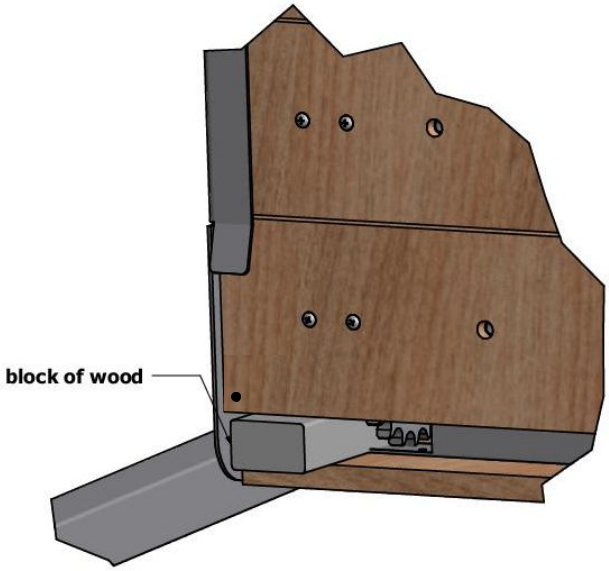

Side Panel Assembly

Mount the bottom side covers. Start with the inner cover: there is a break in the back of the panel to allow you to slide the cover over the bottom shaft. Slide cover over shaft and then slide back into channels or onto Velcro (depending on model). Outer cover just slides in from back or is mounted on the Velcro points: use the shaft slot in the inner cover to help align the outer cover as you slide/mount it.

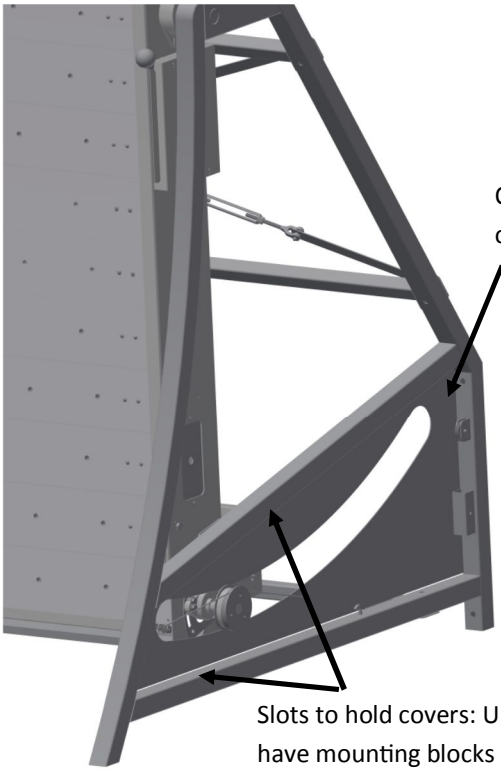

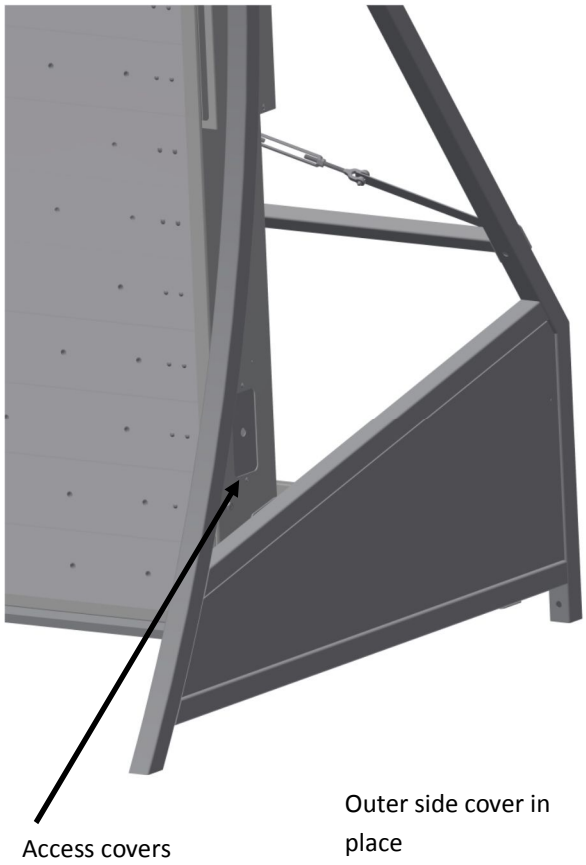

This finishes the installation except for the floor mats, putting on the climbing holds, Ladder Line (optional), and installing the last climbing panel. See the following pages.

Replace any of the covers (Hydraulic box cover, speed control panel cover, etc.

When everything is in place test the wall at different angles and speeds. Finally, put on the last panel and cover the access holes at the bottom of the channels.

Operating Instructions

Installing the optional Ladder Line™

The Ladder Line rungs can be installed anywhere you wish on your Treadwall, but we recommend starting with an even spacing of the rungs with little or no deviation from side to side. This provides the best platform for simple aerobic training and fast sprinting climbs.

The Ladder Line is an excellent way to introduce the Treadwall to those who have not climbed in the past or feel nervous about the Treadwall.

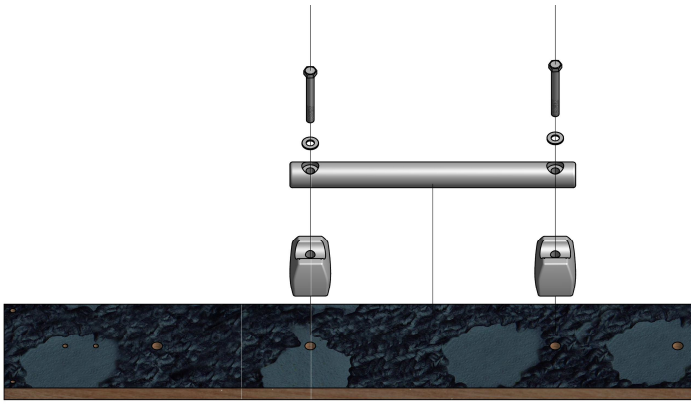

Ladder Line Assembly

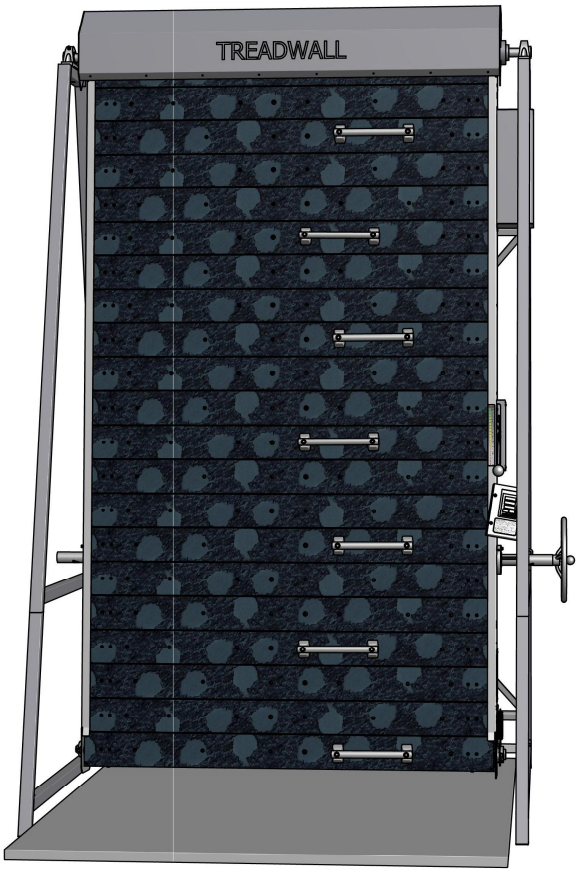

Ladder Line Staggered Pattern

Operating Instructions

Installing the climbing holds—Route Setting!

Placing the climbing holds onto your Treadwall is called route setting, and the individual climbs you set up are called routes.

The standard set of Treadwall climbing holds (Set A) comes with 36 holds (4 foot units) and 45 holds (6 foot units). The 12 foot walls have 9 extra holds. There are 3 colors: green, blue and red, The green is the easiest, blue medium and red the hardest. All are finger-friendly. You can set individual routes by only using hold of a given color, or you can set up the entire wall and label individual routes with color tape or rules about which are for feet, for hands, etc.

One of the best ways to start is to create a route around the wall using just green holds: place holds approximately every 2-3 panels. Try climbing when done, adjust as needed. If you find any move too difficult just move a nearby hold of that color to make the climb work better.

Note: the round head stiffener bolt may be removed and used as a hold placement. Leave the bolt in place if there are not holds in the middle of a panel.

Climbing Hold Rules

There are 2 important rules to remember when purchasing and attaching holds for your Treadwall.

1. *Holds can not be more than 2.5" tall*, this is the projection from the climbing surface.
2. *Holds can not overlap two panels*, the panels must be free to come apart and together as they rotate around the Treadwall.

Assemble holds with a 3/8 bolt and a 5/16" Allen wrench. If a bolt feels tight, do <u>not</u> force: try gently inserting bolt without a hold first. Make sure the bolt goes in fully. Try again with the hold loose on the bolts to allow the bolt to align with the threads.

Final Tests

Final Tests

Before installing the final panel, inspect the inside of the Treadwall:

1) **There may be air trapped in the hydraulic oil after transport: this will cause the unit to run quite rough (cavitation) until the air is slowly released into the reservoir. The amount of air trapped varies, but it may take 10-15 minutes or more of use to begin smoothing out. The system will get smoother and smoother over time.**

2) Make sure the timer-counter is working properly. If it does not count feet as the wall is moving, check that the magnets and sensor are properly installed and adjusted

3) Check the auto-stop function. Start climbing at a moderate speed. If you stop moving up, t*h*e wall should continue down and stop moving downward when your foot reaches the bottom of the wall and triggers the micro switch at the bottom of the right channel. Do this test at all the angles. The micro switch is pre-set at the factory, but it can be adjusted for sensitivity if required by adjustment.

4) Check the drive chain at the top of the right channel. The slack should be adjusted out of it, but it should not be too tight. After climbing for a few minutes, some slack might develop which should be adjusted out. This chain will stretch over time, and should be adjusted after about a month of service. There is an inspection hole in the channel to check the chain so that a climbing panel will not have to be removed.

5) Check the x-bracing rods inside of the channels. They should be equally adjusted (the turnbuckles should look the same) and finger tight with the lock -nuts tightened securely. Do not over tighten—hand tight only.

Final Steps

When everything is in place test the wall at different angles and speeds. Climb 200 feet at least and look for loose holds, make sure the auto stop is working, and the when changing wall angles the bottom covers are not pushed (Angle cassettes are aligned).

Mount the last panel, re-mount the hydraulic box cover, and re-install the two access holes at the bottom of the channels.

Install the mats.

4-foot Max and S and Kore

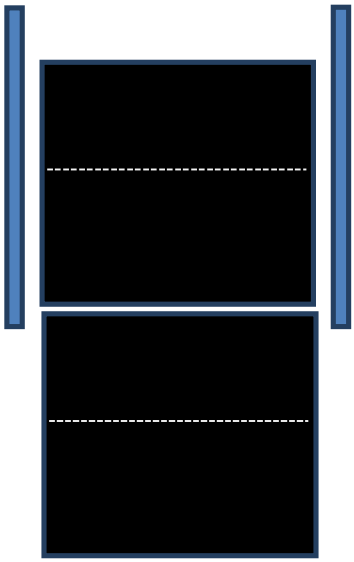

6-foot Max and S and Kore

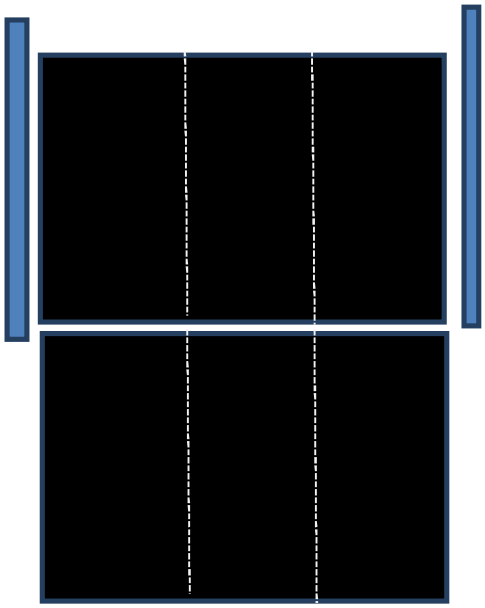

6-foot V

4-foot V

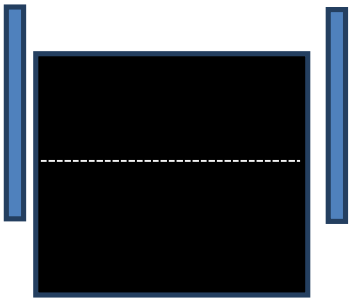

6-foot V

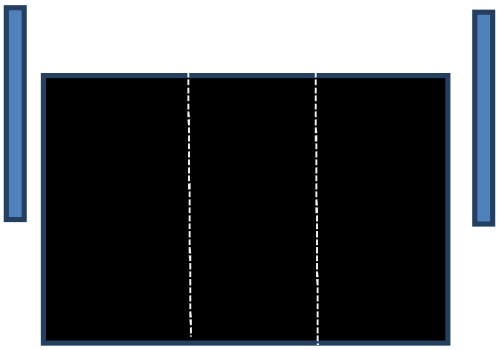

Limited Warranty

LIMITED WARRANTY
Treadwall® rotating walls and Laddermill® ascenders

1. WHO IS COVERED?

The original purchaser ("Original Purchaser") may only enforce this warranty.

2. ORIGINAL PURCHASER OBLIGATIONS

The Original Purchaser assumes full responsibility that the equipment purchased meets their specifications, capacity and other requirements, and for the condition and size considerations of the location in which the equipment will be used.

3. HOW LONG IS THE WARRANTY?

According to the following schedule, Brewer's Ledge Inc. (d/b/a Brewer Fitness) warrants to the Original Purchaser of its specified equipment that under normal maintenance the specified equipment will be free from any defect in materials or workmanship.

For Max, S and V Treadwall FT models and Laddermill models:

Six years – Parts

One year – Electronics and labor

For Kore Home Treadwall FT models:

Two Years – Parts

4. WHEN DOES THE WARRANTY BEGIN?

Warranty begins from date of delivery to Original Purchaser or date of installation in the case of assembly arranged by Brewer's Ledge or their authorized dealer and requires the Original Purchaser to be in compliance with the financial terms of the sales agreement between the Original Purchaser and Brewer's Ledge Inc. or their authorized dealer.

5. WHAT IS NOT COVERED

Normal wear and tear are excluded from this warranty. Damages caused by a lack of maintenance outlined in the owner's manual by the Original Purchaser are excluded from this warranty. No warranty shall be provided in the event the equipment is modified by Original Purchaser, for parts not approved by Brewer's Ledge Inc., or for warranty-related service other than by personnel authorized by Brewer's Ledge Inc.

Wear and tear caused by exterior use is not covered including with units ordered with any exterior upgrades. This includes water damage, UV damage, temperature related damage and surface (non-structural) oxidation.

Damage incurred by negligence during movement, assembly, or breakdown of the equipment by the Original Purchaser or personnel contracted by the Original Purchaser is excluded from this warranty. The sale of special tools and instructional materials to the Original Purchaser and any training of the Original Purchaser's staff by Brewer's Ledge Inc. related to the movement, assembly and break-down of the equipment does not imply any warranty against Original Purchaser negligence and does not void this exclusion. Brewer's Ledge Inc. reserves the sole right to determine the origin of damage as related to this provision.

Any non-residential use of Kore Home products will void this warranty.

Treadwall® Limited Warranty

6. LIMITATION OF DAMAGES AND IMPLIED WARRANTIES

Except as provided herein, Brewer's Ledge Inc. makes no express warranties; implied warranty of merchantability or fitness for a particular purpose is limited in its duration to the duration of the written limited warranties set forth herein.

In no case shall Brewer's Ledge be liable for any special, incidental, or consequential damages based on breach of warranty, breach of contract, negligence or any other legal theory. Such damages include but are not limited to, loss of profits, loss of use of the equipment or any associated equipment, the cost of capital, the cost of substitute equipment, facilities or services, downtime, the claims of third parties, including customers, and injury to property.

This limitation does not apply to claims for personal injury where such limitation would be a violation of the applicable law. Some states do not allow the exclusion or limitation of incidental or consequential damages, so the above limitation or exclusion may not apply to you.

7. TERMS OF WARRANTY

The terms and conditions of this warranty are applicable as between Brewer's Ledge Inc. and Original Purchaser to the sale of equipment to Original Purchaser.

STATE LAW RIGHTS

This warranty gives you specific legal rights, and you may also have other rights, which vary, from state to state.

www.brewerfitness.com

Contact Information

Website

WWW.BREWERFITNESS.COM

Email

SALES@BREWERFITNESS.COM

Address

Please contact us anytime to come by for a visit!

87 York Avenue
Randolph, MA 02368 USA

Phone

1-781-961-5200

Hours: 9 am to 5 pm E.S.T. (NYC time)